RILEY CONSULTANTS

EARTHWORKS AND SEDIMENT CONTROL ASSESSMENT
60, 80, 100 AND 102 LAURENT ROAD CAMBRIDGE

Engineers and Geologists

RILEY CONSULTANTS LTD
New Zealand
Email: riley@riley.co.nz
Email: rileychch@riley.co.nz
Web: www.riley.co.nz

AUCKLAND
4 Fred Thomas Drive, Takapuna, Auckland 0622
PO Box 100253, North Shore, Auckland 0745
Tel: +64 9 489 7872 Fax: +64 9 489 7873

CHRISTCHURCH
22 Moorhouse Avenue, Addington, Christchurch 8011
PO Box 4355, Christchurch 8140
Tel: +64 3 379 4402 Fax: +64 3 379 4403

EARTHWORKS AND SEDIMENT CONTROL ASSESSMENT
60, 80, 100 AND 102 LAURENT ROAD, CAMBRIDGE

Report prepared for: Summerset Villages (Cambridge) Ltd

Report prepared by: Luke Gordon, Senior Civil Engineer

……..

Report reviewed and approved for issue by: Steven James, Project Director, CPEng

……..

Report reference: 180171-I (Issue 2.0)

Date: 29 July 2021

Copies to: Summerset Villages (Cambridge) Ltd 1 electronic copy

Riley Consultants Ltd 1 copy

Issue:	Details:	Date:
1.0	Earthworks and Sediment Control Assessment	26 November 2020
2.0	Final with Revised Master Plan	29 July 2021

Contents

1.0 Introduction 1
2.0 Background and Site Description 1
3.0 Resource Consent Requirements 2
4.0 Geology and Geotechnical Considerations 10
5.0 Proposed Earthworks and Management 11
5.1 Earthwork Philosophies and Principles 13
6.0 Construction Methodology/Sequence and Phases 14
6.1 Phase 1 14
6.2 Phase 2 15
6.3 Phase 3 16
7.0 Assessment of Erosion and Sediment Control Measures 16
7.1 Hydrological 16
7.2 Mitigation Measures 17
7.2.1 Stabilised Construction Entrance 17
7.2.2 Wheel Wash 17
7.2.3 Silt and Super Silt Fences 17
7.2.4 Sediment-laden Diversion Channels and Cleanwater Diversion Bunds 17
7.2.5 Mulching and Granular Hardfill 18
7.2.7 Sediment Retention Ponds 19
7.2.8 Chemical Treatment 19
7.2.9 Dust Control 23
7.3 Management and Maintenance of Sediment Control Measures 24
7.3.1 Accidental Dust or Sediment Emission 24
7.4 Universal Soil Loss Equation 25
8.0 Construction Operation and Noise 26
9.0 Waipa District Council Section 92 Queries and Responses 26
10.0 Conclusion 28
11.0 Limitation 29

Appendices

Appendix A: Catchment Assessments, Calculations for Sediment Control Measures
Appendix B: RILEY Dwgs: RIL-CMB-SW-CW -100 to -111

RILEY CONSULTANTS LTD
New Zealand
Email: riley@riley.co.nz
Email: rileychch@riley.co.nz
Web: www.riley.co.nz

AUCKLAND
4 Fred Thomas Drive, Takapuna, Auckland 0622
PO Box 100253, North Shore, Auckland 0745
Tel: +64 9 489 7872 Fax: +64 9 489 7873

CHRISTCHURCH
22 Moorhouse Avenue, Addington, Christchurch 8011
PO Box 4355, Christchurch 8140
Tel: +64 3 379 4402 Fax: +64 3 379 4403

EARTHWORKS AND SEDIMENT CONTROL ASSESSMENT 60, 80, 100 AND 102 LAURENT ROAD, CAMBRIDGE

1.0 Introduction

The following report has been prepared by Riley Consultants Ltd (RILEY) at the request of Summerset Villages (Cambridge) Ltd (Summerset). It outlines the proposed earthwork activities required to form a finished ground profile for the proposed use of the site, the effects of those works, and the mitigation measures to be used to avoid or mitigate the effects of the proposed earthworks on the environment. This report has been prepared to support the resource consent application and should be read in conjunction with the Preliminary and Detailed Site Investigation reports (RILEY Ref: 180171-B and H) and Geotechnical Assessment (RILEY Ref: 180171-K).

This report and the mitigation measures recommended will be used to inform the resource consent conditions and the proposed erosion and sediment control plan (E&SCP).

2.0 Background and Site Description

The site comprises part of 60 Laurent Road, part of 80 Laurent Road (Lot 4 DPS 74868 [being the future Lot 2 LT 547050]), 100 Laurent Road (Lot 1, DP 381032) and 102 Laurent Road (Lot 2, DP 381032) in Cambridge, Waikato. Construction of residential dwellings has recently been completed to the south of the property as part of the Norfolk Drive subdivision. The site is bounded on the western side by Victoria Road, and connects to the Waikato Expressway 500m to the north of the site.

The land has historically been used for grassland farming. Most of the site is currently grassed with several farm fences, gates, and water troughs in place. Sometime between 2015 and 2017, a stormwater detention/retention pond (in the order of 5,000m^2 and up to approximately 3m deep) was formed at 60 Laurent Road, along with two large stockpiles (in the order of 1,000m^2 and 3,500m^2 and up to approximately 7m high). Within the same period, an archaeological investigation formed a number of trenches, minor excavations, and small stockpiles of spoil material across 80 Laurent Road. Besides these recent features, the site contour is predominantly gentle to flat. Two existing dwellings are located on the 100 Laurent Road. 102 Laurent Road is vacant and is presently used as pastoral land. Both 100 and 102 Laurent Road are accessed via Laurent Road, which runs parallel to Victoria Road.

A topographical survey of the site has been produced by Cogswell Surveyor Limited, January 2019. This shows a typically flat site with minimal elevation variation (typically RL 66.8m along the eastern boundary to RL 65.0m near the south-western corner of the site).

The mid and southern portions of the site are zoned residential, and the northern portion is zoned deferred residential within the Waipa District WDC (WDC) District Plan.

Earthworks will be carried out to satisfy the District Plan provisions (in relation to site gradients, overland flow paths, future building platform levels, and internal roads, etc.) for the proposed use of the site. The earthworks to be carried out on-site, to achieve the desired finished ground profile, will be undertaken in accordance with the design and engineering specifications prepared by RILEY and the Waikato Local Authority "Regional Infrastructure Technical Specifications" (RITS).

3.0 Resource Consent Requirements

Resource consent is required for the volume of proposed earthworks of 28,821m^3 cut and 39,346m^3 fill over a total area of 98,893m^2 (9.89ha) which is a discretionary activity. A summary of the rules and provisions from the WDC District Plan that relate to the proposed works are outlined in the table below, followed by an assessment.

Table 1: District Plan Rules and Provisions

WAIPA DISTRICT PLAN		
Rule	**Provisions**	**Assessment**
Chapter 2 Residential zone: Earthworks –		
Permitted Activities		
Rule 2.4.2.34 Earthworks	Earthworks shall not exceed a total volume of 25m³ or a total area of 250m² in a single activity or in cumulative activities in any calendar year, provided that this rule shall not apply to earthworks incidental to an approved resource consent or building consent.	Does not comply
Chapter 21 Assessment Criteria		
Rule 21.1.1.5 Earthworks	(a) The extent to which methods are utilised to retain high class soils on site for use in rehabilitation.	Not Applicable The site is not located in a high-class soils location. Topsoil from the site will be utilised for landscaping purposes and any excess will be removed from site to an approved landfill facility.
	(b) The extent to which the proposed earthworks affect the values of identified landscape areas and the ability for effects to be avoided in outstanding landscapes.	Not Applicable The site is not located in an outstanding landscape.
	(c) Where located within, adjacent or adjoining an area of indigenous vegetation or vegetation that provides habitat for indigenous species, the extent to which the earthworks will affect ecosystem values including effects on such areas due to altered water levels.	Not Applicable The site is not located within, adjacent or adjoining an area of indigenous vegetation.
	(d) Whether the earthworks proposed are to be undertaken in a manner that avoids, remedies or mitigates any adverse effect on the environment including on the natural character of wetlands, lakes, rivers and their margins; with particular regard to the removal of vegetation, contamination of lakes and water bodies, alteration or diversion of surface or ground water flows.	Complies Proposed earthworks within the site are not near wetlands, lakes, rivers and their margins, however, all bulk earthworks will include appropriate erosion and sediment control measures to ensure works will avoid, remedy or mitigates any adverse effect on the environment.

WAIPA DISTRICT PLAN		
Rule	**Provisions**	**Assessment**
Chapter 2 Residential zone: Earthworks –		
Permitted Activities		
	(e) The extent to which earthworks are to be undertaken in a manner that provides sound foundations and avoids any increased risk to persons or property associated with a natural hazard event which may arise from undertaking earthworks.	Complies All bulk earthworks will be undertaken in accordance with the geotechnical assessments outlined in the RILEY Geotechnical Assessment Report (RILEY Ref: 180171-K). All works will be observed by suitably qualified geotechnical engineer.
	(f) Whether a slope stability and natural ground suitability assessment for foundations of buildings, road services or other works is required and warrants an evaluation, investigation, control and or certification by a suitably qualified geotechnical soils engineer.	Complies All bulk earthworks and development requirements have been assessed and are outlined in the RILEY Geotechnical Assessment Report (RILEY Ref: 180171-K). All works will be observed by suitably qualified geotechnical engineer.
	(g) The timing and extent to which the rehabilitation programme will enable the land to be restored suitable for use by other activities.	Complies Extent and timing of earthwork activities and associated stabilisation is outlined in Section 6 of this report.
	(h) The extent to which methods are used to prevent discharge of contaminants into the air.	Complies Dust control measures are outlined in Section 7.2.9 and Section 7.3.1 of this report.
	(i) The extent to which the earthworks will detrimentally affect adjoining or adjacent sites through changes in soil drainage, ground level, noise, dust, vibration, traffic movement or effects on sites of significance to Māori where the earthworks are adjoining, or on sites of cultural significance.	Complies It is proposed to raise ground levels within the site to ensure building platforms have sufficient freeboard above the 50-year flood levels within the WDC swale. As a result, this would impede overland flow conditions within the neighbouring site east of 102 Laurent Road. It is proposed to construct new public stormwater reticulation through the site prior to bulk earthworks to collect and convey stormwater runoff for up to the 50-year storm event from the neighbouring site and direct to the WDC swale. This pipeline will limit any ponding of stormwater within the neighbouring site beyond pre-development levels. Details of the mitigation measures are outline in Section 5.0 of this report. No bulk earthworks will be undertaken in areas in or near the identified archaeological areas of significance.

WAIPA DISTRICT PLAN		
Rule	**Provisions**	**Assessment**
Chapter 2 Residential zone: Earthworks –		
Permitted Activities		
		All erosion and sediment control measures for the proposed bulk earthworks are in accordance with WRC Erosion and Sediment Control Guidelines for Soil Disturbing Activities, January 2009, Environment Waikato Technical Report No.2009/02. Specific details are outlined in Section 7.0 of this report.
	(j) Where earthworks are proposed in proximity to High Voltage Transmission Lines the extent to which any earthworks and the construction of any subsequent buildings will comply with the New Zealand Electrical Code of Practice for Electrical Safe Distances (NZECP 34:2001).	Complies No bulk earthwork activities are in the proximity of Voltage Transmission Lines
	(k) The extent to which there are any adverse effects on water including groundwater and lake levels. Where areas have high water tables the ground water level shall be identified and defined. Where the work to be undertaken is adjacent to rivers and streams, it shall be established with reference to the average water table of the river or stream at maximum river level. For areas in close proximity to lakes, the ground water table shall be established with reference to the maximum lake level.	Complies All bulk earthwork activities will be above measured groundwater levels and there are no nearby lakes.

A review of the Waikato Regional Plan was undertaken to confirm the proposal complies with the Waikato Regional Plan for Soil disturbance as a Permitted Activity (Rule 5.1.4.11) and meets the conditions for a Permitted Activity (Rule 5.1.5) as demonstrated in the table below.

Table 2: District Plan Rules and Provisions

WAIKATO REGIONAL PLAN		
Rule	**Provisions**	**Assessment**
Chapter 5 Land and Soil Module		
Permitted Activity		
Rule 5.1.4.11 Soil Disturbance, Roading and Tracking and Vegetation Clearance	Unless otherwise provided for by Rules 5.1.4.14, 5.1.4.15, 5.1.4.16 or 5.1.4.17, soil disturbance, roading and tracking, and vegetation clearance and any associated deposition of slash into or onto the beds of rivers and any subsequent discharge of contaminants into water or air are **permitted activities** subject to the conditions in Section 5.1.5.	Refer below
Chapter 5 Land and Soil Module		
Rule 5.1.5 Conditions for Permitted Activity Rule 5.1.4.11 and Standards and Terms for Controlled Activity Rules	(a) Organic material shall not be placed in fill where its subsequent decomposition will lead to land instability.	Complies No Organic material shall be used for engineered fill. All bulk earthworks will be undertaken in accordance with the geotechnical assessments outlined in the RILEY Geotechnical Assessment Report (RILEY Ref: 180171-K)
	(b) Erosion/sediment controls shall be installed and maintained on all earthworks during and on completion of the works to avoid the adverse effects of sediment on water bodies.	Complies All erosion and sediment control measures for the proposed bulk earthworks are in accordance with WRC Erosion and Sediment Control Guidelines for Soil Disturbing Activities, January 2009, Environment Waikato Technical Report No.2009/02. Specific details are outlined in Section 7.0 of this report.
	(c) Cut-offs or culverts shall be designed and installed to prevent scour, gullying or other erosion.	Complies All erosion and sediment control measures for the proposed bulk earthworks are in accordance with WRC Erosion and Sediment Control Guidelines for Soil Disturbing Activities, January 2009, Environment Waikato Technical Report No.2009/02. Specific details are outlined in Section 7.0 of this report.
	(d) Any erosion or instability of the coastal environment, or the beds of rivers and lakes or wetlands shall be avoided or remedied if it does occur.	Complies No works are undertaken near a coastal environment, or the beds of rivers and lakes or wetlands.

WAIKATO REGIONAL PLAN		
Rule	**Provisions**	**Assessment**
Chapter 5 Land and Soil Module		
Permitted Activity		
	(e) The activity shall not result in neighbouring land becoming subject to flooding.	Complies It is proposed to raise ground levels within the site to ensure building platforms have sufficient freeboard above the 50-year flood levels within the WDC swale. As a result, this would impede overland flow conditions within the neighbouring site east of 102 Laurent Road. It is proposed to construct new public stormwater reticulation through the site prior to bulk earthworks to collect and convey stormwater runoff for up to the 50-year storm event from the neighbouring site and direct to the WDC swale. This pipeline will limit any ponding of stormwater within the neighbouring site beyond pre-development levels. Details of the mitigation measures are outline in Section 5.0 of this report.
	(f) All disturbed vegetation, soil or debris shall be deposited or contained to prevent the movement of disturbed matter so that it does not result in: i. the diversion, damming or blockage of any river or stream, or ii. the passage of fish being impeded, or iii. the destruction of any habitat in a water body or coastal water, or iv. flooding or erosion.	Complies Refer to (e) above.
	(g) The activity shall not disturb any archaeological site or wāhi tapu as identified at the date of notification of this Plan, in any district plan, in the New Zealand Archaeological Association's Site Recording Scheme, or by the Historic Places Trust except where Historic Places Trust approval has been obtained.	Complies No bulk earthworks will be undertaken in areas in or near the identified archaeological areas of significance.

WAIKATO REGIONAL PLAN		
Rule	**Provisions**	**Assessment**
Chapter 5 Land and Soil Module		
Permitted Activity		
	(h) The concentration of suspended solids in any point source discharge arising from the activity shall comply with the suspended solids standards as set out in Method 3.2.4.6. This condition applies only to permitted activity rules and excludes any non-point source discharges from roading, tracking and vegetation clearance activities (refer condition o) below).	Complies All erosion and sediment control measures for the proposed bulk earthworks are in accordance with WRC Erosion and Sediment Control Guidelines for Soil Disturbing Activities, January 2009, Environment Waikato Technical Report No.2009/02. Specific details are outlined in Section 7.0 of this report.
	(i) Any discharge of contaminants into air arising from the activity shall comply with the permitted activity conditions in Section 6.1.8 except where the matters addressed in Section 6.1.8 are already addressed by conditions on resource consents for the site.	Complies All erosion and sediment control measures for the proposed bulk earthworks are in accordance with WRC Erosion and Sediment Control Guidelines for Soil Disturbing Activities, January 2009, Environment Waikato Technical Report No.2009/02. Specific details are outlined in Section 7.0 of this report.
	(j) In the event of any wāhi tapu that is not subject to g) above being identified by the Waikato Regional WDC to the person undertaking the activity, the activity shall cease insofar as it may affect the wāhi tapu. The activity shall not be recommenced without the approval of the Waikato Regional WDC.	Not Applicable There is no wāhi tapu identified on the site. Any discovery of wāhi tapu will comply with the Waikato Regional Plan Rule 2.3.4.22 process.
	(k) No storage or mixing of fuels, oils, or agrichemicals shall be undertaken in areas where deliberate or inadvertent discharge is likely to enter any permanent natural surface water body.	Complies Storage or mixing of fuels and oils will be within control areas and not near permanent natural surface water body. Operational details of construction equipment and machinery for the bulk earthwork activities will be outlined in a Construction Management Plan.
	(l) All vegetation that is being felled within five metres of a perennial water body shall be felled away from the water body, except edge vegetation, or vegetation leaning over a water body, which if necessary may be felled in accordance with safety practices.	Complies There is no identified perennial water body within or near the site.

WAIKATO REGIONAL PLAN		
Rule	**Provisions**	**Assessment**
Chapter 5 Land and Soil Module		
Permitted Activity		
	(m) All exposed areas of soil resulting from the activity shall be stabilised against erosion by vegetative cover or other methods as soon as practical following completion of the activity and no later than 6 to 12 months from the date of disturbance to avoid the adverse effects of sediment on water bodies.	Complies All erosion and sediment control measures for the proposed bulk earthworks are in accordance with WRC Erosion and Sediment Control Guidelines for Soil Disturbing Activities, January 2009, Environment Waikato Technical Report No.2009/02. Specific details are outlined in Section 7.0 of this report.
	(n) The activity shall not be located within 20 metres of a Significant Geothermal Feature.	Complies The proposed bulk earthworks are not within 20 metres of a Significant Geothermal Feature
	(o) The concentration of suspended solids in any non-point discharges from roading, tracking and vegetation clearance activities shall meet the following standards; I. The activity or discharge shall not result in any of the following receiving water standards being breached: II. in Waikato Region Surface class waters - 100 grams per cubic metre suspended solids concentration. III. in Indigenous Fisheries and Fish Habitat class waters – 80 grams per cubic metre suspended solids concentration. IV. in Trout Fisheries and Trout Spawning Habitat class waters - 25 grams per cubic metre suspended solids concentration. V. in Contact Recreation class waters - black disc horizontal visibility greater than 1.6m. VI. in Natural State class waters - the activity or discharge shall not increase the concentration of suspended solids in the receiving water by more than 10%.	Complies All erosion and sediment control measures for the proposed bulk earthworks are in accordance with WRC Erosion and Sediment Control Guidelines for Soil Disturbing Activities, January 2009, Environment Waikato Technical Report No.2009/02. Specific details are outlined in Section 7.0 of this report.

WAIKATO REGIONAL PLAN		
Rule	**Provisions**	**Assessment**
Chapter 5 Land and Soil Module		
Permitted Activity		
	Standard a) shall apply, except where the suspended solids concentration or black disc horizontal visibility in the receiving water is greater than the standards specified, at the time and location of discharge or of undertaking the activity. Then there shall not be any increase (i.e. further deterioration) in the receiving water suspended solids concentration or black disc horizontal visibility of more than 20% as a result of the activity or discharge. The point at which compliance with this standard shall be measured is after reasonable mixing has occurred which in any instance does not exceed 200m from the point of discharge.	
	(p) Soil disturbance associated with the construction of a road or track within 20m of a culvert or bridge provided for in Rules 4.2.8.1, 4.2.8.2, 4.2.9.1, 4.2.9.2 and 4.2.9.3; i. Shall not occur adjacent to Significant Indigenous Fisheries and Fish Habitat Class waters during August to December inclusive and Significant Trout Fisheries and Trout Habitat class waters during May to September inclusive; and, ii. Shall be stabilised against erosion by vegetative cover or other methods as soon as practical following completion of the activity and no later than two months from the date of disturbance to avoid the adverse effects of sediment on water bodies; and iii. The location of the proposed soil disturbance shall be notified to the Waikato Regional WDC in writing at least ten working days prior to commencing construction.	Complies No bulk earthworks are undertaken within 20m of a culvert or bridge.

Advisory Note:

- Where a wāhi tapu site is identified whilst undertaking the activity, the process that Waikato Regional WDC will follow in order to implement condition/standard and term j) is set out in Section 2.3.4.22 Process to be followed where wāhi tapu sites are identified during exercise of Permitted Activities, of this Plan.

WAIKATO REGIONAL PLAN		
Rule	**Provisions**	**Assessment**
Chapter 5 Land and Soil Module		
Permitted Activity		
• Where a structure or activity is to be located in, on, under or over the bed of a water body that is Significant Geothermal Feature, Rules 7.6.6.1 to 7.6.6.3 shall apply. Significant Geothermal Features are defined in the Glossary, and in Development and Limited Development Geothermal Systems, identified on maps in Section 7.10 of this Plan.		

4.0 Geology and Geotechnical Considerations

The 1:250,000 published geological map (GNS Science: 2005) of the Waikato region, indicates the site is underlain by alluvial deposits of the Hinuera Formation. The Hinuera Formation typically comprises cross-bedded pumice sand, silt, and gravel with interbedded peat.

Ground conditions encountered by RILEY geotechnical investigation were broadly similar to those encountered by previous investigations at the site. Ground conditions are summarised below:

- Topsoil is generally present across the site and was encountered in hand auger boreholes to a depth of between 0.1m to 0.5m.
- Very loose to loose silts with varying amounts of sand and silty sands were encountered from the base of the topsoil, to a depth of between 0.45m and 1.3m.
- Beyond this depth, medium dense to very dense sands were encountered with varying amounts of gravel, and interbedded with silt, silty sand, and gravelly sand with variable pumice content, to a depth beyond 30m.
- It is indicated that the interbed horizons are non-continuous and the strata is highly variable.
- In the southern portion of the site, the approximately 1,000m^2 stockpile appears to be predominantly topsoil and organic soils, and the approximately 3,500m^2 stockpile appears to be predominantly inorganic subsoil of inferred alluvial origin (i.e. similar to shallow site subsoil).
- The northern portion of the site returned similar subsoil conditions to the central and southern portions of the site. Soil strengths generally improved with depth.
- Stockpiles of spoil from an archaeological investigation were inspected. These stockpiles are considered to be uncontrolled fill. The related trenches are also non-engineered.

During the RILEY investigations at various times, groundwater was encountered at a range of depths across the site indicating groundwater varies on a seasonal basis. At the time of the 2018 site investigation, the existing stormwater pond in the southern portion of the site had a standing water level at 2m below the adjacent ground level. However, hydrostatic pressures measured while carrying out testing indicate that deeper sands had porewater pressure corresponding to a 7.6m groundwater level, while shallow sands had porewater pressure corresponding to a 5.5m groundwater level. From these investigations, it is inferred that perched water tables are present at various depths within the site, with limited horizontal continuity.

Piezometer monitoring was undertaken for a short period of time before the equipment became damaged. This indicated groundwater levels between 3.2m and 4.8m depth.

In some parts of the site ponding of water was present, indicating that some soils on the site have relatively low permeability. A number of soakage tests were attempted at 2m depth. The soakage tests were abandoned due to extremely high permeability soils exhausting the limited water supply.

Based on the proposed bulk earthwork activities, it is not envisaged that groundwater will be encountered.

Reference should be made to the RILEY Geotechnical Assessment (RILEY Ref: 180171-K) for further detail.

5.0 Proposed Earthworks and Management

Earthworks are required to improve the site contours in order to satisfy the design and layout requirements for the proposed use of the site, in a way which will meet District Plan requirements. The proposed earthwork activities entail shaping of the finished topography to achieve desired gradients for the proposed use of the land, to ensure stormwater overland flow paths are appropriately managed, backfilling of an existing detention pond located within the southern portion of the site, localised trimming of internal ground profiles during the construction of roads and platforms, construction of private and public reticulation to service the site, and undertaking ground improvements beneath the main building platform.

Specific design assumptions adopted to develop a finished ground profile for the site for bulk earthworks are as follows:

- Minimum finished floor levels for the platforms along the southern and western boundaries of the site are at least 500mm above existing roadside kerb levels and the 50-year flood levels within the proposed swale adjacent to Victoria Road, respectively.
- Overland flow paths within the site are to be safely directed to the west towards the swale to be installed by WDC. This will include the localised infilling of low-lying areas to ensure that site levels and gradients can maintain adequate freeboard relative to the proposed swale along Victoria Road.
- To achieve a cut fill balance and the need for retaining structures across the site.
- Isolate and eliminate any earthwork activities in or near the identified archaeological areas of significance.

Existing topographical survey information indicates that ground levels near the south-east corner of 102 Laurent Road are approximately RL 65.0m, where the ground levels rise to the west to approximately RL 65.4m. These levels indicate that localised ponding would occur during extreme storm events. The envisaged 50-year flood level within the WDC swale adjacent to the Summerset western boundary is approximately 64.83m. As a result, finished ground levels will need to be raised within 102 Laurent Road to achieve building freeboard requirements relative the 50-year flood levels within the WDC swale and to ensure overland flow within the site is safely directed to the western boundary. The raising of the ground levels within 102 Laurent Road has the potential to create greater ponding depths in a localised area within the neighbouring property near the Summerset eastern boundary. In order to address this (beyond pre-development levels) and to maintain overland flow conditions for up to the 50-year storm event within a limited catchment area of the neighbouring site, a proposed pipeline and intake structure will be constructed on the Summerset eastern boundary to collect and convey surface stormwater runoff to the proposed WDC swale. A specific assessment of this proposed stormwater pipeline is contained in the RILEY Engineering Infrastructure Report (RILEY Ref: 180171-J), and preliminary details of this pipeline and intake structure are shown on the RILEY Dwg: RIL-CMB-SW-CW -102 for reference.

RILEY has developed a 3D model using 12D software to generate the proposed finished contours across the site based on the above assumptions. From this model, the estimated earthwork quantities to form the sites desired ground profile were determined, as shown in Table 3. The maximum cut and fill depths at the existing stockpile and stormwater detention pond are 7.6m and 4.0m, respectively. The maximum cut and fill depths to undertake bulk earthworks across the site are 1.0m and 1.2m, respectively. Refer to RILEY Dwg: RIL-CMB-SW-CW-103 for the proposed cut and fill depths across the site.

Table 3: Estimated Bulk Earthwork Quantities

Phase of Construction	Estimated Earthworks Area (m^2)	Cut (m^3)	Fill (m^3)	Balance (m^3)
Phase 1	79,651	-25,986	35,253	9,267 (fill)
Phase 2	12,000	-99	3,828	3,729 (fill)
Phase 3	7,242	-2,736	265	-2,471(cut)
Total	**98,893**	-28,821	39,346	10,525 (fill)

These volumes are estimated from existing ground levels, allowing for a 300mm topsoil strip across the earthwork area and comparing these against the proposed subgrade levels. The subgrade level was assumed to be 450mm below the proposed finished levels of pavement areas.

In addition to the quantities above, approximately 5,000m^3 of cut will be required across the Main Building platform to form a granular foundation raft (ground improvements).

Fill material used to lift existing ground levels will be sourced from excavations within the site. It is anticipated that the remaining balance of fill materials (comprising granular materials) will be sourced from off-site. The estimated quantity of imported material for haul roads, pavement, and service trenches, including structural hardfill for building platforms and ground improvements is approximately 25,100m^3 (approximately 5,000m^3 for ground improvements for the Main Building platform). If required, unsuitable cut materials will be removed to a suitable disposal area off-site.

Excess topsoil that cannot be placed within the site for landscaping purposes will be removed from site to an approved landfill facility. The estimated excess topsoil to be removed from site is approximately 20,000m^3.

The earthwork activities will be supervised by a suitably qualified engineer, to ensure that materials have been placed and compacted in accordance with RILEY specifications.

5.1 Earthwork Philosophies and Principles

Earthworks have the potential to generate sediment runoff and dust emissions until the site has been stabilised (i.e., through placement of mulch, aggregate or topsoil/grass). Careful planning and design of the proposed earthworks has been undertaken to ensure all potential adverse environmental effects are mitigated. This will be achieved by the timing and sequencing of earthworks activities with the inclusion of specifically designed erosion and sediment control devices.

The general principles that will be adopted during the earthworks activities and incorporated in the E&SCP and the dust management plan are as follows:

- Minimise the disturbance area due to earthwork activities as far as practicable, while satisfying all requirements for development of the site.
- Undertake earthworks in various phases, and progressively stabilise exposed areas following completion.
- Divert all clean water runoff away from exposed earthworks areas to the existing overland flow outlet to the north-east, thus reducing the contribution of the site to the catchment.
- Intercept sediment-laden runoff from exposed areas with silt fences to provide filtration and retention of sediment prior to discharging to the downstream environment.
- Implement measures to prevent construction traffic exiting the construction area onto public roads with sediment and other materials attached to the undercarriage and tyres.
- Ensure the exposed earthwork areas remain in a damp condition, utilising water trucks as necessary, until surfaces have been stabilised.
- Regularly inspect the erosion and sediment control measures and undertake any maintenance necessary to maximise the potential retention of sediment on the site.
- In the event of forecast heavy rain, stabilise the site as far as practicable and cease works until weather becomes suitable to recommence works.
- Ongoing assessment of the erosion and sediment control measures and, if required, adjustments as the work progresses.
- Ensure site staff are aware of the requirements of the E&SCP and the relevant resource consent conditions prior to the works commencing.
- Ensure that after hours contact details are available.

These principles are generally in accordance with WRC Erosion and Sediment Control Guidelines for Soil Disturbing Activities, January 2009, Environment Waikato Technical Report No.2009/02.

Furthermore, the earthworks contract developed for the site will place specific responsibilities on the contractor for the environmental management of the site. As part of this management, the contractor will be responsible for providing adequate erosion and sediment control measures to protect downstream environments.

6.0 Construction Methodology/Sequence and Phases

The following section outlines the anticipated construction methodology and sequencing for the proposed earthwork activities. The strategy for the construction methodology for the earthwork activities is to minimise any effects on the environment. As discussed earlier, in order to achieve this philosophy, it is proposed to undertake earthworks over three phases, progressively stabilise exposed surfaces as building platform and road subgrades are achieved and provide adequate sediment control measures to avoid the discharge of sediment laden run-off from the site.

It is expected that the proposed earthworks will take approximately eight months to complete in total. It is envisaged that the bulk earthworks will not commence until the proposed swale along the western boundary of the site has been constructed by WDC and is operational. It is also envisaged that earthworks will be carried out over two summer seasons. Works will cease over the winter period if weather conditions require this. The duration of the works may be extended if works are behind schedule, or the site may be stabilised and shut down until the next earthworks season.

Construction of all underground services will likely commence at the completion of the bulk earthworks within each phase. Trenches for the services will be progressively backfilled with hardfill, and therefore will not give rise to any discharge beyond the site.

The proposed phases and layouts for the earthwork activities on the site, with the associated erosion and sediment control measures, are generally as follows:

6.1 Phase 1

Phase 1 earthworks (refer to RILEY Dwg: RIL-CMB-SW-CW-104) will consist of the establishment of earthmoving and demolition machinery, site offices, creation of sediment control devices, removal of existing trees and fences, and earthworks required to construct building platforms and form road subgrade levels across 60 and 80 Laurent Road. The sequence of works anticipated for the Phase 1 area is as follows:

a) Form stabilised construction entrances and stabilised yard areas off Mary Ann Drive. Install wheel wash facility for outgoing traffic. These measures will be constructed and maintained throughout the works to minimise migration of sediments to the public roading network.

b) Remove existing fences and trees (including root systems) and vegetation.

c) Construct sediment control measures, comprising sediment retention pond, diversion bunds and silt fences. It is proposed to use the existing detention pond located within the southern portion of the site as a sediment retention pond (on the western boundary of the site). Downstream perimeter controls would be formed to direct runoff to this pond.

d) Strip topsoil and stockpile on-site in the designated location. Excess material not intended to be reused on-site shall be removed to an approved disposal site.

e) Commence bulk earthworks across the site. It is envisaged that material will be placed from the eastern boundary and progressively working west. Internal roading areas will be formed to subgrade level and building platforms (including adjacent areas) to the specific formation levels.

f) During the earthworks and upon formation of road and building platform subgrade levels, imported granular material will be used to stabilise areas.

g) It is likely that the construction of the underground services will continue beyond completion of the bulk earthworks. Trenches for the services will be progressively backfilled with hardfill.

h) On completion of the bulk earthworks within the Phase and areas are stabilised, the sediment pond will be decommissioned and backfilled.

i) The haul roads and stabilised construction entrances will remain in operation to service the balance of the earthworks area.

6.2 Phase 2

Phase 2 (refer to RILEY Dwg: RIL-CMB-SW-CW-105) would likely be undertaken following the completion of Phase 1. Activities during this phase will consist of the establishment of earthmoving and demolition machinery, creation of sediment control devices, removal of existing trees and fences, and earthworks required to construct building platforms and form road subgrade levels across 102 Laurent Road. The bulk earthworks and management of sediment laden water will follow similar principles and sequences as Phase 1.

The sequence of works anticipated for the Phase 2 area is as follows:

a) Form stabilised construction entrance off Victoria Road and within 100 Laurent Road as shown on the RILEY Dwg: RIL-CMB-SW-CW-105. Install wheel wash facility for outgoing traffic. Extend the stabilised accessway through to 102 Laurent Road. These measures will be constructed and maintained throughout the works to minimise migration of sediments to the public roading network.

b) Remove existing fences and trees (including root systems) and vegetation.

c) Construct sediment control measures, comprising sediment retention pond, diversion bunds and silt fences.

d) Construct proposed public stormwater pipeline from eastern boundary through to the WDC swale to collect and convey stormwater overland flow from the neighbouring site.

e) Strip topsoil and stockpile on-site in the designated location. Excess material not intended to be reused on-site shall be removed to an approved disposal site.

f) Commence bulk earthworks across the site. It is envisaged that material will be placed from the eastern boundary and progressively working west. Internal roading areas will be formed to subgrade level and building platforms (including adjacent areas) to the specific formation levels.

g) During the earthworks and upon formation of road and building platform subgrade levels, imported granular material will be used to stabilise areas.

h) It is likely that the construction of the underground services will continue beyond completion of the bulk earthworks. Trenches for the services will be progressively backfilled with hardfill.

i) On completion of the bulk earthworks within the Phase and areas are stabilised, the sediment pond will be decommissioned and backfilled.

The haul roads and stabilised construction entrances will remain in operation to service the balance of the earthworks area.

6.3 Phase 3

This phase (refer to RILEY Dwg: RIL-CMB-SW-CW-106) will consist of the establishment of earthmoving and demolition machinery, creation of sediment control devices, removal of existing trees and fences, and earthworks required to construct building platforms and form road subgrade levels across 100 Laurent Road. The bulk earthworks and management of sediment laden water will follow similar principles and sequences as Phase 1 and Phase 2.

The sequence of works anticipated for the Phase 3 area is as follows:

a) Remove existing fences and trees (including root systems) and vegetation.

b) Construct sediment control measures, comprising a series of earth decanting bunds, diversion bunds and silt fences.

c) Strip topsoil and stockpile on-site in the designated location. Excess material not intended to be reused on-site shall be removed to an approved disposal site.

d) Commence bulk earthworks across the site. It is envisaged that material will be placed from the eastern boundary and progressively working west. Internal roading areas will be formed to subgrade level and building platforms (including adjacent areas) to the specific formation levels.

e) During the earthworks and upon formation of road and building platform subgrade levels, imported granular material will be used to stabilise areas.

f) It is likely that the construction of the underground services will continue beyond completion of the bulk earthworks. Trenches for the services will be progressively backfilled with hardfill.

g) On completion of the bulk earthworks within the phase and areas are stabilised, the decanting bunds will be decommissioned and backfilled.

Please note that the above phase of works will not commence until resource consents and engineering approvals have been obtained for the site.

7.0 Assessment of Erosion and Sediment Control Measures

The management and design of the sediment and erosion control measures have been assessed based on the total area of the earthwork activities. The following outlines the methods to be used to avoid or mitigate the effects of the proposed land disturbing activities, such as erosion and subsidence. Preliminary designs of the specific erosion and sediment control devices to be used are shown on RILEY Dwgs: RIL-CMB-SW-CW -104 to-111.

7.1 Hydrological

Hydrological analysis was undertaken in accordance with the principles outlined in the Waikato Local Authority “Regional Infrastructure Technical Specifications” (RITS) – Section 4 Stormwater, to assess design stormwater runoff flows contributing to possible erosion and sediment control measures. Guidance from the Erosion and Sediment Control Guidelines for Soil Disturbing Activities, Environment Waikato Technical Report No.2009/02 (TR0902) was used to determine the selection of storm events.

Appended plans show how the site has been divided into clean and sediment-laden water catchments. Appended calculations provide catchment characteristics for the site and the resulting peak flow rates for the 20% Annual Exceedance Probability (AEP) (i.e. 5-year average recurrence interval (ARI), respectively) event required in TR0902.

7.2 Mitigation Measures

The following techniques will be used by the contractor to control sediment-laden runoff and to prevent erosion of exposed ground. These techniques follow TR0902. Typical details are shown on RILEY Dwgs: RIL-CMB-SW-CW -107 to -111.

7.2.1 Stabilised Construction Entrance

Stabilised construction entrances off Mary Ann Drive (Phase 1) and Laurent/Victoria Road (Phases 2 and 3) will be formed in accordance with TR0902 standards. This will prevent tracking of soil onto the public roads. The following specifications will be used for a typical stabilised entrance.

Table 4: Stabilised Construction Entrance Aggregate Specifications

Aggregate Size	50mm to 150mm washed aggregate
Thickness	150mm minimum or 1.5 x aggregate size
Length	10m minimum length recommended
Width	4m minimum

7.2.2 Wheel Wash

A wheel wash facility is proposed at the site exit points (Mary Ann Drive and Laurent/Victoria Road). The wheel wash will consist of a temporary mobile chamber or a shallow pit (stabilised with roading aggregates) and will be filled with water. The purpose of the wash is to clean the earthmoving truck tyres and therefore, reduce the amount of sediment being tracked over public roads. The wheel wash will maintain a pool depth of 400mm to 500mm, and water will be replenished regularly (dirty water to be pumped and removed from site or overflow directed to sediment pond/decanting structures).

7.2.3 Silt and Super Silt Fences

These will be used at various locations and times during construction. The silt fences will detain flows from the construction area so deposition of transported sediment can occur through settlement. The design and implementation of these silt fences will be in accordance with TR0902.

7.2.4 Sediment-laden Diversion Channels and Cleanwater Diversion Bunds

Sediment Laden diversion channels/bunds will be used to intercept silt-laden runoff and divert into earth decants and sediment ponds. Cleanwater diversion bunds will be used to divert upstream catchment flows safely away from proposed earthwork areas and limit catchment areas contributing to downstream treatment devices. The channels and bunds have been designed for the 20-year ARI rainfall storm event and generally include a 0.30m freeboard, where possible.

The typical worst-case dimensions and locations of the channels/bunds used during earthworks are summarised below:

Table 5: Sediment-laden Diversion Channel/Bund

Location/Description	Catchment Area (ha)	Design Flow (m^3/s)	Typical Grade	Total Depth (m)*	Lining/Rock Checks Required
North/West channel – Phase 1 – SB 1	6.3	0.90	0.5%	0.90	N/A
North/West channel – Phase 1 – SB 2	1.1	0.18	0.5%	0.65	N/A
Western channels (x2) – Phase 2 – SB 3	1.1	0.18	0.5%	0.65	N/A
Western channels (x3) – Phase 3 – SB 4	0.3	0.053	0.5%	0.55	N/A

Note: * Channels all have 1:3 side slopes and total depths include 300mm freeboard unless stated. Channel sizes based on maximum catchment.

Table 6: Cleanwater Diversion Bunds

Location/Description	Catchment Area (ha)	Design Flow (m^3/s)	Typical Grade	Total Depth (m)*	Lining/Rock Checks Required
Catchment A – Eastern Boundary – Phase 1	2.23	0.24	0.5%	0.65	N/A
Catchment B – Eastern Boundary – Phase 3	1.2	0.20	0.5%	0.65	N/A

Note: * Channels all have 1:3 side slopes and total depths include 300mm freeboard unless stated. Channel sizes based on maximum catchment.

The channels and bunds generally have longitudinal gradients less than 1%. Where the grade exceeds this, or flow velocities are high, the channels should be lined with either rocks or geotextile fabric to prevent erosion of the underlying soils. Calculations undertaken for the above sediment control measures are appended.

7.2.5 Mulching and Granular Hardfill

Mulching will be used to provide protection of exposed soils where earthworks require immediate stabilisation. Mulching would be mechanically applied to ensure even spread and appropriate application. The mulch will protect exposed soils from the erosive forces of raindrop impact and overland flow. Mulching also prevents the drying of the exposed soil by retaining moisture, controlling weeds, and promoting the establishment of desirable vegetation. The mulch comprises unrotten small grain straw and would be applied at a minimum rate of $0.6kg/m^2$ or until no bare soil is viable through the mulch layer.

It is unlikely significant areas of mulching will be required as surfaces will be progressively stabilised with compacted granular hardfill once subgrade levels have been achieved. Alternatively, the application of hydroseeding or use of dust suppressant polymers will be employed where earthworks require immediate stabilisation.

7.2.6 Earth Decanting Bunds

Earth bunds incorporating floating decant structures will be used to reduce the amount of sediment leaving the site by detaining the runoff. The bunds have been sized to accommodate a volume of approximately 2% to 3% of the catchment (where maximum catchment area is approximately 0.3ha). The bunds have been designed to pass the 1% AEP rainfall storm event. Details have also been included to prevent erosion of the exposed soils (i.e. geotextile lining). Decants shall also incorporate a level spreader at the inlet and have a 3:1 length width ratio.

Floating decant structures for earth decants will be incorporated to reduce the amount of sediment leaving the site by detaining the runoff. The use of a floating decant in accordance with TR0902 Guidelines for a sediment retention pond will further facilitate settlement of sediments before discharge. This will also allow lifting decants during chemical batch dosing. The table below details the typical criteria for an earth decant structure with a maximum contributing catchment.

Table 7: Earth Decanting Bunds

Bund Reference No.	Maximum Catchment Area (m^2)	Storage Volume (m^3)	Spillway Cross Section (m)
Bunds A and B	3,000	60	1.0 x 0.25
Bund C	1,500	30	1.0 x 0.25

7.2.7 Sediment Retention Ponds

Sediment retention ponds will be used to treat sediment laden runoff and reduce the volume of sediment leaving the site. Sediment retention ponds are used where large areas of earthworks will remain exposed to erosion during a construction period.

The sediment retention ponds will be positioned at a convenient collection point for the sediment laden runoff being the natural low point of the site. This position will also allow for easy access to carry out routine maintenance of the structure. Emergency spillway arrangement will be directed down the construction accessway towards existing table drains or across existing ground surfaces.

The contributing catchment area for the sediment retention ponds is shown in Table 7. The minimum capacity of the ponds will be $200m^3$ for each hectare of maximum contributing catchment (2% of the contributing catchment) where 10% of this volume is used as a sediment forebay.

Sediment retention ponds will be constructed and maintained in general accordance with TR0902. Typical layout details for the sediment retention pond and the decant structures are shown on RILEY Dwgs: RIL-CMB-SW-CW -107, -108 and -111.

Table 8: Sediment Retention Ponds

Pond Reference and Stage	Catchment Area (ha)	Top Width (m)	Top Length (m)	Total Depth (m)	Width of Spillway (m)	Storage Volume (m^3)
Pond A*	7.98	59	83	3.00	6.5	11,900
Pond B	1.20	12	36	1.20	2.0	360

Pond A is utilising the existing detention pond located within the southern portion of the site. This will only occur following the construction of the proposed swale along Victoria Road (western boundary of the site). Perimeter controls would be formed around the boundaries to direct runoff to this pond. For reference, the minimum storage for a 2% sediment pond servicing an 8ha catchment is approximately $1,600m^3$.

7.2.8 Chemical Treatment

In conjunction with the sediment retention pond, the collected sediment laden runoff from the catchment area will require chemical treatment. This will further reduce the quantity of sediment potentially discharged from the site downstream.

Chemical treatment of the runoff is proposed to enhance the effectiveness of the sediment ponds and sediment control measures on-site. The chemical liquid coagulant will be added to the incoming flows to the sediment retention pond and decanting bunds via rainfall-activated systems. The coagulant neutralises the electrical forces between the sediment particles, thus accelerating coagulation and rate of sedimentation within a sediment retention pond.

The rainfall activated chemical systems and the layout will be designed and constructed in accordance with TR0902. The anticipated design, operation, and maintenance of the proposed systems are described in the following sections of this report.

Assessment of Dosing Rates

The chemical coagulate used for the rainfall activated treatment system will be Poly Aluminium Chloride (PAC). The dosing rate required to achieve effective coagulation and settlement of suspended solids within the sediment laden runoff generated from the exposed earthwork area varies for different soil types. The PAC dose generally required to achieve effective coagulation and settlement of the sediment laden runoff will vary between 65ml to 125ml (equivalent to 4mg/L to 8mg/L of aluminium) per cubic metre of stormwater. For the purposes of this report, the PAC dose rate has been assumed to be 95ml (equivalent to 6mg/L of aluminium) per cubic metre of stormwater. However, bench testing on sediment laden water samples obtained from the site will be carried out by the contractor prior to construction to confirm the minimum dosing rate. The bench testing will consist of the following:

- Obtain several 1L sediment laden water samples from the site. If not available, soils from the site will be mixed with stormwater to obtain samples.
- Introduce progressively, doses to the samples with different quantities of PAC to determine the optimum dose rate. The optimum dose rate is assessed when between 50mm to 100mm clarity is obtained (allow two hours for final settling).
- Test the selected samples to ensure the pH is above 5.5.

The chemical treatment system will be progressively reviewed by the contractor and may require ongoing manipulation to ensure the design suits the site characteristics and runoff. Where the pH of the pond stormwater discharges falls below 5.5, chemical treatment will cease.

General Treatment System Details

The components of the chemical treatment systems will include a rainfall catchment tray, header tank, displacement tank, and reservoir tank, as detailed in Figure 1.

Figure 1: Typical Rainfall Driven Dosing System

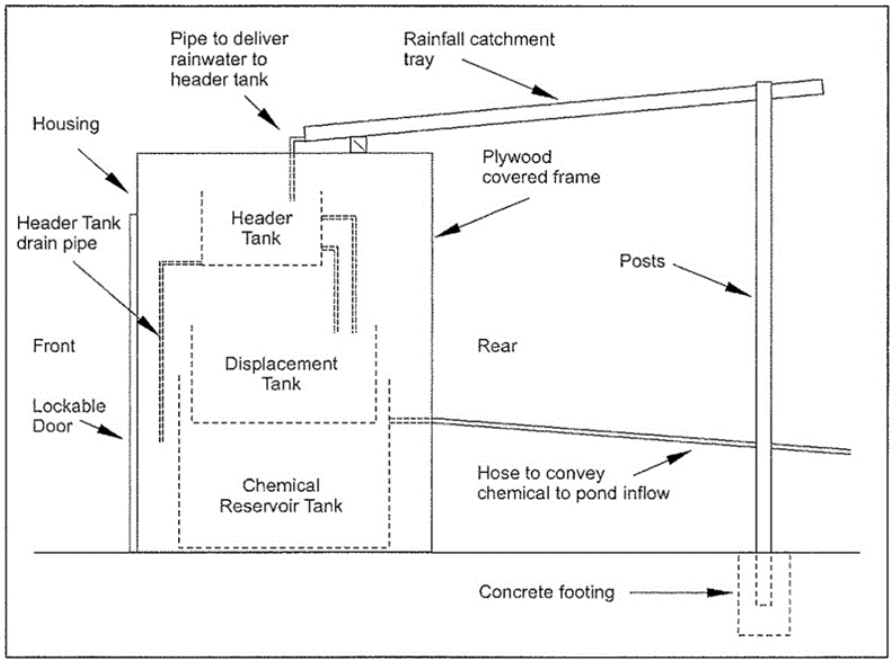

The purpose and the design requirements for each of the components used for the chemical treatment system are as follows:

Catchment Tray

The catchment tray is specifically designed to collect rainfall and drain to the header tank. The catchment tray will be sized based on the catchment area contributing to the sediment retention pond and decanting bunds and the chemical dose required to achieve effective removal of suspended solids. It will be assumed 100% of the runoff generated from the catchment area contributing to the devices require treatment at the designed dose rate.

Header Tank

The header tank will provide storage capacity to avoid dosing during initial rainfall following a dry period, and attenuate dosing at the beginning and end of a rainstorm to simulate the runoff hydrograph. The design of the header tank will include the following:

- Header tank drainpipe at the base of the tank. This will enable the lowering of the water level prior to the next rainfall event to provide pre-dose rainfall allowance and delay the start of dosing under dry conditions.
- Low and high rate outlets. The low and high rate outlets will consist of a 3mm and 10mm internal diameter hose, respectively. The high rate outlet will provide sufficient capacity to convey the maximum predicted flow from the catchment tray for a short-term rainfall (up to 40mm/hour).
- Sufficient capacity in the header tank for up to 12mm of rainfall before dosing commences. This will provide for a delayed start volume between the lowest outlet pipe and low rate outlet of the header tank (12l/m² of rainfall catchment tray).
- The high rate outlet invert is positioned at the level where the volume between the low rate outlet and the high rate outlet is equal to volume assessed from 12l/m² of rainfall catchment tray.
- 50mm of freeboard above the top of the high rate outlet pipe.

Displacement Tank

The displacement tank will be placed within the reservoir tank that stores the chemical coagulant. As water fills the displacement tank from the header tank, coagulant will be displaced through an outlet in the reservoir tank to the dosing point. The design of the displacement tank will include the following:

- Tank dimensions to ensure a neat fit within the chemical reservoir tank. This will optimise the proportion of stored chemical available for dosing.
- Minimum capacity within the displacement tank for the 50% AEP 24-hour storm event.

Reservoir Tank

The reservoir tank will store and release the chemical coagulant during rainfall events. The design of the reservoir tank will include the following:

- Reservoir tank will be slightly larger than the displacement tank, but of similar height.
- Minimum capacity of reservoir tank will be sufficient to provide dosing for the runoff from the 50% AEP 24-hour storm event.
- Outlet hose (20mm internal diameter) in the side of the tank to enable drainage of coagulant to the forebay of the sediment retention pond.

The general components for the corresponding chemical treatment systems have been designed based on the runoff volumes generated from the 50% AEP rainfall storm event in the contributing catchment of the sediment retention pond and decanting bund. The proposed sizes and layout of the components have been summarised in Table 9.

Table 9: Components of Chemical Treatment System

Components of Chemical Treatment System	Sediment Retention Pond A*	Sediment Retention Pond B
Catchment area (ha)	5.0ha	1.2ha
Predicted PAC dose rate (mg Al)	6	6
Volume of stormwater dosed/Litre PAC (m^3/L)	10.7	10.7
Runoff Volume (m^3) – 50mm rainfall	2500	600
Rainfall Catchment Tray (m^2)	5.61	1.35
Header Tank		
- Low flow outlet diameter (mm)	12	12
- Low flow outlet level above drainage pipe outlet (L)	67.29	16.15
- High flow outlet diameter (mm)	12	12
- High flow outlet level above low flow outlet (L)	67.29	16.15

Note: * Pond A dosing rate based on a 5ha catchment. Review required based on staging of earthworks within this catchment to adjust treatment requirements.

The dosing point from the chemical treatment system will be located near the forebay inlet for the sediment retention ponds. This will ensure the coagulant is sufficiently mixed by turbulent flows into the sediment retention pond.

The indicative dimensions of a shed to incorporate the chemical treatment system will be approximately 1.2m wide by 2.4m long by 2.4m high. The sheds will be located to ensure easy operation and access for maintenance. In addition, containment bunds will be formed around the shed to contain chemicals in a spillage event.

Bench testing shall be regularly carried out by the contractor to ensure the design suits the site characteristics and runoff. Where the pH of the stormwater discharge falls below 5.5, chemical treatment will cease.

7.2.9 Dust Control

Dust can be made airborne by wind or vehicular movement or a mixture of both. Activities considered likely to generate dust include the following:

- Site clearance.
- Vehicle movements.
- Removal and replacement of topsoil.
- Excavation of material.
- Stockpiles, especially uplifting of material from stockpiles.
- Loading of vehicles.
- Temporary haul road construction.
- Foundation construction.

Exposed earthwork areas will be maintained to minimise the release of dust into the atmosphere. In the event of dust generation becoming obvious through earthwork activities, appropriate measures to reduce the dust release to acceptable levels shall be undertaken.

Methods that may be adopted for the dust control measures are as follows:

- Ensure the exposed earthwork areas remain in a damp condition, utilising water trucks as necessary, until surfaces have been stabilised.
- Limit site traffic speed to a level to reduce the production of dust into the atmosphere.
- Stabilised entrance at the entry/exit points of the site with provision of a wheel wash facility.
- Phasing of earthworks in order to isolate and reduce the area of exposed earthworks, and mulch or place granular fill over exposed surfaces as soon as practical.
- If necessary, earthwork activities may be limited in specific areas during periods of high wind.

Furthermore, it should be noted that stockpiled material has the potential to create dust nuisance. Dust can also be generated when material is added to or excavated from a stockpile. The following methods, as appropriate, are proposed to control dust from stockpiles.

- Wet suppression via water trucks.
- Covered storage in sensitive locations.
- Reduced/controlling stockpile height and slopes (reduce wind entrainment).

- In the extreme event that remedial measures are found to be ineffective for the control of dust, works may be suspended as a precautionary measure until conditions are suitable for resumption.
- Stabilisation of stockpile areas.

At this stage it is anticipated that water required for dust suppression will be primarily sourced from water supply connections servicing the site.

7.3 Management and Maintenance of Sediment Control Measures

As part of the earthworks contract, the contractor will be responsible for providing adequate sediment and erosion control measures in accordance with resource consent conditions and the E&SCP, to protect downstream environments from sedimentation and water quality degradation.

Regular maintenance should be carried out during the operational life of the sediment, dust, and erosion control devices. Inspections will be carried out after every significant rainfall event and during periods of prolonged rainfall. Checks should include inspection for scour and signs of a possible breach for devices, such as the diversion bund. Signs of failure should be repaired immediately. Accumulated sediment should be removed to ensure the design capacity of the device is maintained. Devices should be maintained until the construction areas are secure and stabilised.

7.3.1 Accidental Dust or Sediment Emission

In the event that the primary control measures are placed under significant pressure (e.g. extreme weather event), the following secondary measures will apply:

- Cease earthworks carried out in the contributing catchment area.
- Sediment – Repair existing sediment control devices and/or construct secondary devices to intercept and prevent further migration of sediment-laden runoff from entering the downstream system.
- Notify the site engineer of the event. The contractor will provide details of the mitigation measures employed to the site engineer prior to recommencing earthworks.

The consent holder will nominate an appropriately qualified and experienced person, to be responsible for the control of sediment and dust in the course of earthworks construction on the site. The consent holder will nominate a point of contact for receipt of any complaints. The consent holder will erect a sign at the entrance with the 24-hour contact details for the person who will respond to complaints. A typical procedure for responding to a complaint is as follows:

- The contractor's nominated representative should contact the engineer and provide details for the cause of the complaint. The contractor will also provide options to rectify the cause of the complaint.
- The contractor/engineer would liaise with the complainant to discuss the mitigation options, if applicable.
- The contractor will carry out the remedial measures following the approval from the engineer.

7.4 Universal Soil Loss Equation

It has been assumed that the earthworks will take approximately eight months to complete (Phase 1: five months; Phase 2: two months; and Phase 3 one month), with an additional month for reinstatement.

From the Universal Soil Loss Equation (USLE) it has been estimated approximately 34.98 tonnes of sediment could be released to the receiving environment from the construction works if no mitigation measures are adopted. Utilising the above methodology and mitigation measures, the USLE indicates the sediment loss reduces to approximately 1.35 tonnes over the construction and re-establishment period. Approximately 0.21 tonnes would normally be discharged from a pre-development scenario (Appendix A: USLE calculations).

From the USLE results, an assessment has been carried out identifying areas of higher sediment yield and where the sensitivity/vicinity of the receiving environment dictates a higher risk profile and focus is required to manage risk. The proposed erosion and sediment practices have been evaluated for these specific areas and Table 10 outlines the specific controls that will be put in place to mitigate potential adverse effects on the receiving environment for these areas.

Table 10: Estimated Sediment Yield, Risk Profile, and Mitigation Measures per Catchment

Area of Earthworks (ha)	Sediment Yield for Mitigated Scenario (tonnes)	Risk Profile	Specific Controls/ Methodologies/Monitoring to Mitigate Risk
Phase 1 (7.98ha)	1.24	Low risk given the volume of storage provided within the detention pond of the catchment, generally good soakage within underlying soils and the relatively flat gradients across the site. Diversion bunds provided to ensure entire catchment diverted to sediment pond. Manage earthworks by progressively stabilising exposed area, containing runoff and directing to a large sediment pond.	Diversion bunds directly flow to sediment pond. Sediment levels to be monitored and chemical flocculation investigated if these are deemed to be excessive. Provide silt fences around boundaries for added protection. Topsoil and mulching and/or granular placement progressively to reduce exposed areas at one given time. Staging earthworks in this area will have the greatest effect of reducing sediment yields. For reference, if 7.98ha of earthworks is undertaken without staging, the sediment yield would be 1.77 tonnes compared with 1.24 tonnes when staging with a 5 and 2.98ha catchment.
Phase 2 (1.20ha)	0.08	Low risk given the size of the catchment, generally good soakage within underlying soils and the relatively flat gradients across the site.	Provide sediment pond bunding and silt fences around boundaries. Topsoil and mulching and/ or granular placement progressively to reduce exposed areas at one given time.

Area of Earthworks (ha)	Sediment Yield for Mitigated Scenario (tonnes)	Risk Profile	Specific Controls/ Methodologies/Monitoring to Mitigate Risk
Phase 3 (0.723ha)	0.02	Low risk given the size of the catchment, generally good soakage within underlying soils and the relatively flat gradients across the site.	Diversion bunds to direct runoff to earth decanting bunds and silt fences around boundaries. Topsoil and mulching and/ or granular placement progressively to reduce exposed areas at one given time.

8.0 Construction Operation and Noise

Bulk earthwork activities will be carried out within the operating hours as outlined in the District Plan.

Activities shall be conducted, and buildings located, designed and used to ensure that they do not exceed the following noise limits at the boundary of the site:

(a) Monday to Saturday – 7.00am to 10.00pm 50dBA (Leq).

(b) Sundays and Public Holidays - 8.00am to 6.00pm 40dBA (Leq).

(c) At all other times 40dBA (Leq).

(e) Night time 10.00pm to 7.00am single noise event 70dBA (Lmax).

Construction noise emanating from a site shall meet the limits recommended in and be measured and assessed in accordance with New Zealand Standard NZS 6803:1999 Acoustics – Construction Noise.

9.0 Waipa District Council Section 92 Queries and Responses

Section 92 queries on the initial application were received from WDC and responded by Bentleys on 8 March 2021. The relevant infrastructure queries raised and corresponding responses are outlined below for reference. Further comments have been added where necessary, based on the revised Master Plan, and are shown in italics. Please note that the approach to service the village site has remained the same from previous assessments.

Table 11: S92 Responses

	WDC S92 item	Response
5.	*Earthworks: Within the Phase 1 earthworks, the assumption is that the swale along Laurent Road is completed, however the swale construction is dependent on the access arrangement to both 100 and 102 Laurent Road, which presently remains unresolved between WDC and the landowner. Further information is required outlining how this issue is proposed to be resolved by the landowner and when it is to be implemented. In addition, comment should be made as to the use of, and access to, 100 and 102 Laurent Road prior to Phases 2 and 3 being undertaken.*	The earthworks to be undertaken on the site for Phase 1 and the subsequent developments are premised on the swale being installed. In the absence of Phases 2 and 3 being progressed, it will be necessary for the swale design to maintain access to 100 & 102 Laurent Road. These are property matters, with conditions of consent able to be imposed, requiring the swale to be suitably implemented ahead of the works on the site which require it to be in place (such as receiving stormwater).

	WDC S92 item	Response
6.	*Earthworks: The proposed temporary works entrance for earthworks is down Mary Ann Drive which is an appropriate entrance location for heavy vehicles however a parcel of land is located between the formed portion of Mary Ann Drive and the subject site (Lot 201 DP 519601 (RT 817304)). There is no mention in the application as to the involvement of Lot 201 DP 519601 and further information is required to understand this parcels involvement in the development.*	The completion of the two road ends does not form part of the application. The application proposes to take access/egress over Lot 201 DP519601 to the northern pair of units from the end of Mary Anne Drive, and provide egress over Lot 201 DP519601 to Kerekori Way. Easements will be provided across Lot 201 DP519601 for this purpose. This parcel is currently owned by the applicant and will be used to provide for construction access from the end of the current formed road. *Further Response: The master plan has subsequently been revised to provide access through to the village from the end of Mary Ann Drive. The completion of the road end does not form part of the application. The application proposes to take access/egress over Lot 201 DP519601 to the site boundary from the end of Mary Ann Drive. Easements will be provided across Lot 201 DP519601 for this purpose.*
9.	*Stormwater: The stormwater assessment included with the application has provided a modelled stormwater system that conveys to the WDC swale which is yet to be fully constructed. This aligns with the overarching stormwater discharge consents and stormwater management plan for the area which conveys primary flows to the swale. When reviewing the detail related to the stormwater model, it has been identified that the 10-year events (10% AEP) have the hydraulic grade line and water levels high within the manholes (both including and excluding roofs). Development Engineering have concerns with these outcomes due to the implications of pressure build up and the potential risk of manhole lids popping off. More information is required to mitigate this potential issue.*	The northern and central pipelines are proposed public stormwater lines. The southern pipeline will be private reticulation and will be addressed under NZBC. The northern pipeline has been assessed to pass the 50-year event based on maximum predicted water levels within the WDC swale (i.e. 500mm freeboard to building platforms and maintaining a flood free site). As outlined on the RILEY drawings, the upstream manhole is proposed to be a drop structure (with a scruffy dome inlet) to convey the stormwater runoff generated from upstream, for the 50-year event. The maximum water levels in manholes within the village are typically greater than 0.5m below lid levels. In regard to the central (and southern) pipeline, the assumed water level within the swale is 0.5m below the 50-year level provided by WDC. WDC were not able to confirm water levels within the swale for smaller duration storm events (less than the 50-year event). As a result, a conservative tail water level was assumed for the 10-year event. Modelling the reticulation to the swale assumes instantaneous flows from the site and assuming maximum water levels have been reached within the swale. Based on earlier modelling results of the NW Pond provided by WDC, water level peaks within the pond (and associated swales) will occur after a long duration. This indicates that the peak runoff from the site will likely occur before peak water levels are reached within the swale.

	WDC S92 item	Response
		As provided within RILEY Ref: 180171-J Engineering Assessment, dated 26 November 2020, the Preliminary modelling of the central pipeline indicates that there is approximately 0.5m freeboard within the manholes based on the assumed tailwater effects of the swale. Following discussions with WDC, we have also undertaken assessments of the two-year storm, which show no surcharging of the manholes. These assessments clearly show that reticulation can be designed and constructed to service the contributing catchment, based on conservative parameters. Furthermore, we would expect WDC to provide details of operational water levels of various storm events to enable specific designs of reticulation to be undertaken at Engineering Approval and Building Consent stages, which has yet to be provided. Once this information is provided, further assessments can be undertaken to confirm if there is a potential risk of pressure build up within the manholes. Preliminary assessments have indicated that increasing the size of reticulation will further improve water levels within manholes, but not significantly. Hydraulic grade lines are controlled by the water levels within the swale. We note that this will also affect existing reticulation that will be directed from Norfolk Drive to the swale. *Note: Assessments undertaken as part of the revised Master plan and associated stormwater management show similar outcomes to previous assessments.*

10.0 Conclusion

A summary of the recommendations outlined in this report for mitigating the effects of the earthwork activities on the receiving environment is as follows:

- Works would be carried out in general accordance with TR0902.
- Where possible, works would be staged to minimise the extent of exposed areas. However, sediment and erosion controls have been designed to cater for the entire site.
- The overall earthworks figures for the site are summarised below.

Table 12: Earthworks summary

Phase of Construction	Estimated Earthworks Area (m^2)	Cut (m^3)	Fill (m^3)	Balance (m^3)
Phase 1-3	**98,893**	-28,821	39,346	10,525 (fill)

- We consider the effects on the environment due to suspended sediments arising from the proposed earthwork activities at the site will be adequately addressed by the mitigation measures detailed in this report.

11.0 Limitation

This report has been prepared solely for the benefit of Summerset Villages (Cambridge) Ltd as our client, with respect to the brief, and consent authorities in processing the consent(s). The reliance by other parties on the information or opinions contained in the report will, without our prior review and agreement in writing, be at such parties' sole risk.

Opinions and judgements expressed herein are based on our understanding and interpretation of current regulatory standards and should not be construed as legal or planning opinions. Where opinions or judgements are to be relied on they should be independently verified with appropriate advice.

APPENDIX A

Catchment Assessments, Calculations for Sediment Control Measures

RILEY CONSULTANTS LTD
New Zealand
Email: riley@riley.co.nz
Email: rileychch@riley.co.nz
Web: www.riley.co.nz

AUCKLAND
4 Fred Thomas Drive, Takapuna, Auckland 0622
PO Box 100253, North Shore, Auckland 0745
Tel: +64 9 489 7872 Fax: +64 9 489 7873

CHRISTCHURCH
22 Moorhouse Avenue, Addington, Christchurch 8011
PO Box 4355, Christchurch 8140
Tel: +64 3 379 4402 Fax: +64 3 379 4403

CALCULATIONS FOR SEDIMENT CONTROL MEASURES 60, 80, 100 AND 102 LAURENT ROAD, CAMBRIDGE

Prepared for:	Summerset Villages (Cambridge) Ltd
Prepared by:	Luke Gordon, Senior Civil Engineer
	……..
Reviewed and approved for issue by:	Steven James, Director, CPEng
	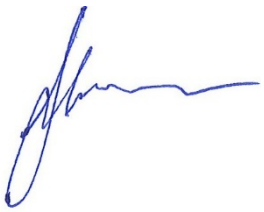
	……..
Project reference:	180171
Date:	26 November 2020

LEGEND

- SITE BOUNDARY
- SF — SILT FENCE
- SEDIMENT BUND
- DIRTY WATER DIVERSION CHANNEL
- CLEANWATER DIVERSION CHANNEL
- PHASE 1A EARTHWORKS AREA
- PHASE 1B EARTHWORKS AREA
- PHASE 1C EARTHWORKS AREA
- STABILISED CONSTRUCTION AREA

15 0 30 60m
SCALE 1:1500

NOTES:

1. ALL EROSION AND SEDIMENT MEASURES TO BE IN ACCORDANCE WITH WRC EROSION AND SEDIMENT CONTROL GUIDELINES FOR SOIL DISTURBING ACTIVITIES, JANUARY 2009, ENVIRONMENT WAIKATO TECHNICAL REPORT NO.2009/02

CA (2.23ha)

BOURKE DRIVE

KEREKORI WAY

TEMPORARY 450mmø CULVERT FOR CROSSING OF DIVERSION CHANNEL

STABILISED CONSTRUCTION ENTRANCE WITH TRUCK WASH. CROWN OVER CHANNEL AND TEMPORARY CULVERT

TW

MARY ANN DRIVE

PHASE 1 TEMPORARY STOCKPLIE AREA WITH PERIMETER SILT FENCE

(6.3ha)

STABILISED CONSTRUCTION ACCESSWAY

MAIN BUILDING

SB2 (1.1ha)

NORFOLK DRIVE

60m W x 7m L x 0.6m D FOREBAY AND LEVEL SPREADER. GRADE AND SHAPE UPSLOPE GROUND PROFILES INTO FOREBAY.

EXCLUSION ZONE – NO EARTHWORKS IN THIS AREA

SEDIMENT POND – REUSE EXISTING STORMWATER DETENTION POND FOLLOWING THE CONSTRUCTION OF THE SWALE ALONG VICTORIA ROAD

FLOATING DECANT STRUCTURE WITH 300mm uPVC OUTLET. DIRECT TO SWALE

PROPOSED SWALE TO BE CONSTRUCTED BY COUNCIL PRIOR TO WORKS COMMENCING ON SITE

SB1

EMERGENCY SPILLWAY (6.5m WIDE x 0.3m DEEP). SHAPE AND DIRECT TOWARDS SWALE. ENSURE SWALE IS INSTALLED AT THE LOWEST POINT WITH AT LEAST 0.5m DEPTH FROM INVERT TO SURROUNDING CREST POINTS OF THE POND.

VICTORIA ROAD

FOR CONSENT

REV	DATE	ISSUE	BY
1	26.11.20	RESOURCE CONSENT ISSUE	PO

DESIGN	DES CHECK	APPROVED FOR ISSUE
SJ	SJ	S JAMES
DRAWN	CAD CHECK	
PO	PO	
DATE DRAWN		ISSUE DATE
AUGUST 2020		26/11/20

RILEY CONSULTANTS
www.riley.co.nz

Summerset

CLIENT	SUMMERSET VILLAGES (CAMBRIDGE) LTD
ADDRESS	LAURENT ROAD, CAMBRIDGE
PROJECT	PROPOSED RETIREMENT VILLAGE
SHEET TITLE	EROSION AND SEDIMENT CONTROL LAYOUT - PHASE 1

CADFILE	180171–104
SCALE (A3)	1:1500
ORIG. SHEET SIZE	A3
DRAWING No.	180171-104
REV.	1

LEGEND

- SITE BOUNDARY
- SF — SILT FENCE
- SEDIMENT BUND
- DIRTY WATER DIVERSION CHANNEL
- CLEANWATER DIVERSION CHANNEL
- PHASE 2 EARTHWORKS AREA
- COMPLETED STABILISED AREA
- STABILISED CONSTRUCTION AREA

15 0 30 60m
SCALE 1:1500

NOTES:

1. ALL EROSION AND SEDIMENT MEASURES TO BE IN ACCORDANCE WITH WRC EROSION AND SEDIMENT CONTROL GUIDELINES FOR SOIL DISTURBING ACTIVITIES, JANUARY 2009, ENVIRONMENT WAIKATO TECHNICAL REPORT NO.2009/02

BOURKE DRIVE

KEREKORI WAY

MARY ANN DRIVE

NORFOLK DRIVE

COMPLETED PHASE 1 EARTHWORKS AND STABILISED SITE

STOCKPILED MATERIAL FROM STAGE 1

SB3 (1.1ha)

SB3 (1.1ha)

MAIN BUILDING

SEDIMENT POND (12m x 36m). PRIMARY OUTLET TO BE DIRECTED TO PHASE 1 PRIVATE STORMWATER RETICULATION

EXCLUSION ZONE – NO EARTHWORKS IN THIS AREA

STABILISED CONSTRUCTION ENTRANCE WITH TRUCK WASH FROM VICTORIA RD

VICTORIA ROAD

FOR CONSENT

REV	DATE	ISSUE	BY
1	26.11.20	RESOURCE CONSENT ISSUE	PO

DESIGN	DES CHECK	APPROVED FOR ISSUE
SJ	SJ	S JAMES
DRAWN	CAD CHECK	
PO	PO	
DATE DRAWN		ISSUE DATE
AUGUST 2020		26/11/20

RILEY CONSULTANTS
www.riley.co.nz

Summerset

CLIENT	SUMMERSET VILLAGES (CAMBRIDGE) LTD
ADDRESS	LAURENT ROAD, CAMBRIDGE
PROJECT	PROPOSED RETIREMENT VILLAGE
SHEET TITLE	EROSION AND SEDIMENT CONTROL LAYOUT - PHASE 2

ISO 9001 CERTIFIED

CADFILE	180171-105
SCALE (A3)	ORIG. SHEET SIZE
1:1500	A3
DRAWING No.	REV.
180171-105	1

LEGEND

- SITE BOUNDARY
- SF — SILT FENCE
- SEDIMENT BUND
- DIRTY WATER DIVERSION CHANNEL
- CLEANWATER DIVERSION CHANNEL
- PHASE 3 EARTHWORKS AREA
- COMPLETED STABILISED AREA
- STABILISED CONSTRUCTION AREA

15 0 30 60m
SCALE 1:1500

NOTE SW Pipeline in place to divert upslope catchment.

NOTES:

1. ALL EROSION AND SEDIMENT MEASURES TO BE IN ACCORDANCE WITH WRC EROSION AND SEDIMENT CONTROL GUIDELINES FOR SOIL DISTURBING ACTIVITIES, JANUARY 2009, ENVIRONMENT WAIKATO TECHNICAL REPORT NO.2009/02

BOURKE DRIVE
KEREKORI WAY
MARY ANN DRIVE
NORFOLK DRIVE
VICTORIA ROAD
MAIN BUILDING

COMPLETED PHASE 1 EARTHWORKS AND STABILISED SITE

COMPLETED PHASE 2 EARTHWORKS AND STABILISED SITE

CB (1.2ha)

SB4 (0.3ha)

EARTH DECANTS A AND B (0.3ha CATCHMENT)

EXCLUSION ZONE – NO EARTHWORKS IN THIS AREA

EARTH DECANT C (0.15ha CATCHMENT)

STABILISED CONSTRUCTION ENTRANCE WITH TRUCK WASH FROM VICTORIA RD (FROM PHASE 2)

FOR CONSENT

REV	DATE	ISSUE	BY
1	26.11.20	RESOURCE CONSENT ISSUE	PO

DESIGN	DES CHECK	APPROVED FOR ISSUE
SJ	SJ	S JAMES
DRAWN	CAD CHECK	
PO	PO	
DATE DRAWN		ISSUE DATE
AUGUST 2020		26/11/20

RILEY CONSULTANTS
www.riley.co.nz

Summerset

CLIENT	SUMMERSET VILLAGES (CAMBRIDGE) LTD
ADDRESS	LAURENT ROAD, CAMBRIDGE
PROJECT	PROPOSED RETIREMENT VILLAGE
SHEET TITLE	EROSION AND SEDIMENT CONTROL LAYOUT - PHASE 3

ACENZ
ISO 9001 CERTIFIED

CADFILE	180171–106
SCALE (A3)	1:1500
ORIG. SHEET SIZE	A3
DRAWING No.	180171-106
REV.	1

Riley Consultants Limited

Runoff Parameters and Time of Concentration
(from ARC's TP108)

Project Title: SS Cambridge **By:** SJ

Project Number: 180171 **Checked:**

Catchment: Catchment 1 **Date:** 26-Nov-20

Scenario: Sediment Laden Bund 1

1. Runoff Curve Number (CN) and Initial Abstraction (Ia)

Soil Name	Soil Classification	Cover Description	Pervious, Impervious	CN*	Area (Ha)	Product of CN x Area
		Bare soils	Im P	91	6.3	573.3
* from Appendix B, TP108 (ARC, 1999)				**Totals =**	6.3	573.3

CN (Weighted) = 91.0

Ia (Weighted) = 0.0 mm

2. Time of Concentration

Channelisation Factor, C = 0.8 (from Table 4.2)

Catchment Length, L = 0.4 km (along drainage path)

Catchment Slope, S_C = 0.005 m/m (by equal area method)

Runoff factor = 0.83

Time of Concentration, t_C = 0.33 hrs

Time to Peak, t_P (=2/3 t_C) = 0.22 hrs

t_P = 13.2 mins

Riley Consultants Limited

Graphical Peak Flow Method
(from ARC's TP108)

Project Title: SS Cambridge **By:** SJ

Project Number: 180171 **Checked:**

Catchment: Catchment 1 **Date:** 26-Nov-20

Scenario: Sediment Laden Bund 1

1. Data

Catchment Area ….	A =	0.063	km^2
Runoff curve number….	CN =	91.0	
Initial Abstraction….	Ia =	0.0	mm
Time of Concentration….	tc =	0.33	hrs

2. Calculate Storage, S = (1000/CN - 10)25.4 = 25.1 mm

	Storm #1	Storm #2	Storm #3
3. Average Recurrence Interval, ARI (yr)	20	100	
4. 24-hour Rainfall Depth, P_{24} (mm)	114	152	
5. Compute c* = (P_{24}-2Ia)/(P_{24}-2Ia+2S)	0.69	0.75	0.00
6. Specific Peak Flowrate, q* (from Figure 5.1)	0.125	0.129	0.000
7. Peak Flowrate, q_p = q*AP_{24} (m^3/s)	0.8952	1.2381	0.0000
8. Runoff Depth, Q_{24} = (P_{24}-Ia)2/(P_{24}-2Ia)+S (mm)	93.4	130.4	0.0
9. Runoff Volume, V_{24} = 1000Q_{24}A (m^3)	5885	8218	0

Riley Consultants Limited

Runoff Parameters and Time of Concentration
(from ARC's TP108)

Project Title: SS Cambridge
By: SJ

Project Number: 180171
Checked:

Catchment: Catchment 2 and 3
Date: 26-Nov-20

Scenario: Sediment Bund 2 and 3

1. Runoff Curve Number (CN) and Initial Abstraction (Ia)

Soil Name	Soil Classification	Cover Description	Pervious, Impervious	CN*	Area (Ha)	Product of CN x Area
		Bare soils	Im P	91	1.1	100.1
* from Appendix B, TP108 (ARC, 1999)				**Totals =**	1.1	100.1

CN (Weighted) = 91.0

Ia (Weighted) = 0.0 mm

2. Time of Concentration

Channelisation Factor, C = 0.8 (from Table 4.2)

Catchment Length, L = 0.2 km (along drainage path)

Catchment Slope, S_C = 0.005 m/m (by equal area method)

Runoff factor = 0.83

Time of Concentration, t_C = 0.21 hrs

Time to Peak, t_P (=2/3 t_C) = 0.14 hrs

t_P = 8.4 mins

Riley Consultants Limited

Graphical Peak Flow Method
(from ARC's TP108)

Project Title: SS Cambridge **By:** SJ

Project Number: 180171 **Checked:**

Catchment: Catchment 2 and 3 **Date:** 26-Nov-20

Scenario: Sediment Bund 2 and 3

1. Data

Catchment Area ….	A =	0.011	km^2
Runoff curve number….	CN =	91.0	
Initial Abstraction….	Ia =	0.0	mm
Time of Concentration….	tc =	0.21	hrs

2. Calculate Storage, S = (1000/CN - 10)25.4 = 25.1 mm

	Storm #1	Storm #2	Storm #3
3. Average Recurrence Interval, ARI (yr)	20	100	
4. 24-hour Rainfall Depth, P_{24} (mm)	114	152	
5. Compute c* = (P_{24}-2Ia)/(P_{24}-2Ia+2S)	0.69	0.75	0.00
6. Specific Peak Flowrate, q* (from Figure 5.1)	0.144	0.149	0.000
7. Peak Flowrate, q_p = q*AP_{24} (m^3/s)	0.1802	0.2492	0.0000
8. Runoff Depth, Q_{24} = (P_{24}-Ia)2/(P_{24}-2Ia)+S (mm)	93.4	130.4	0.0
9. Runoff Volume, V_{24} = 1000Q_{24}A (m^3)	1028	1435	0

Riley Consultants Limited

Runoff Parameters and Time of Concentration
(from ARC's TP108)

Project Title: SS Cambridge
By: SJ

Project Number: 180171
Checked:

Catchment: Catchment 4
Date: 26-Nov-20

Scenario: Sediment Laden Bund 4

1. Runoff Curve Number (CN) and Initial Abstraction (Ia)

Soil Name	Soil Classification	Cover Description	Pervious, Impervious	CN*	Area (Ha)	Product of CN x Area
		Bare soils	Im P	91	0.3	27.3
* from Appendix B, TP108 (ARC, 1999)				**Totals =**	0.3	27.3

CN (Weighted) = 91.0

Ia (Weighted) = 0.0 mm

2. Time of Concentration

Channelisation Factor, C = 0.8 (from Table 4.2)

Catchment Length, L = 0.1 km (along drainage path)

Catchment Slope, S_C = 0.005 m/m (by equal area method)

Runoff factor = 0.83

Time of Concentration, t_C = 0.13 hrs

Time to Peak, t_P (=2/3 t_C) = 0.09 hrs

t_P = 5.3 mins

Riley Consultants Limited

Graphical Peak Flow Method
(from ARC's TP108)

Project Title:	SS Cambridge	**By:**	SJ
Project Number:	180171	**Checked:**	
Catchment:	Catchment 4	**Date:**	26-Nov-20
Scenario:	Sediment Laden Bund 4		

1. Data

Catchment Area ….	A =	0.003	km^2
Runoff curve number….	CN =	91.0	
Initial Abstraction….	Ia =	0.0	mm
Time of Concentration….	tc =	0.16	hrs

2. Calculate Storage, S = (1000/CN - 10)25.4 = 25.1 mm

	Storm #1	Storm #2	Storm #3
3. Average Recurrence Interval, ARI (yr)	20	100	
4. 24-hour Rainfall Depth, P_{24} (mm)	114	152	
5. Compute c* = (P_{24}-2Ia)/(P_{24}-2Ia+2S)	0.69	0.75	0.00
6. Specific Peak Flowrate, q* (from Figure 5.1)	0.154	0.159	0.000
7. Peak Flowrate, q_p = q*AP_{24} (m^3/s)	0.0527	0.0726	0.0000
8. Runoff Depth, Q_{24} = (P_{24}-Ia)2/(P_{24}-2Ia)+S (mm)	93.4	130.4	0.0
9. Runoff Volume, V_{24} = 1000Q_{24}A (m^3)	280	391	0

Riley Consultants Limited

Runoff Parameters and Time of Concentration
(from ARC's TP108)

Project Title: SS Cambridge
By: SJ

Project Number: 180171
Checked:

Catchment: Catchment A
Date: 26-Nov-20

Scenario: Cleanwater Bund A

1. Runoff Curve Number (CN) and Initial Abstraction (Ia)

Soil Name	Soil Classification	Cover Description	Pervious, Impervious	CN*	Area (Ha)	Product of CN x Area
		Upslope existing catchment	Im P	74	2.23	165.02
* from Appendix B, TP108 (ARC, 1999)				**Totals =**	2.23	165.02

CN (Weighted) = 74.0

Ia (Weighted) = 0.0 mm

2. Time of Concentration

Channelisation Factor, C = 0.8 (from Table 4.2)

Catchment Length, L = 0.2 km (along drainage path)

Catchment Slope, S_C = 0.005 m/m (by equal area method)

Runoff factor = 0.59

Time of Concentration, t_C = 0.25 hrs

Time to Peak, t_P (=2/3 t_C) = 0.17 hrs

t_P = 10.2 mins

Riley Consultants Limited

Graphical Peak Flow Method
(from ARC's TP108)

Project Title:	SS Cambridge	**By:**	SJ
Project Number:	180171	**Checked:**	
Catchment:	Catchment A	**Date:**	26-Nov-20
Scenario:	Cleanwater Bund A		

1. Data

Catchment Area ….	A =	0.0223	km^2
Runoff curve number….	CN =	74.0	
Initial Abstraction….	Ia =	0.0	mm
Time of Concentration….	tc =	0.25	hrs

2. Calculate Storage, S = (1000/CN - 10)25.4 = 89.2 mm

	Storm #1	Storm #2	Storm #3
3. Average Recurrence Interval, ARI (yr)	20	100	
4. 24-hour Rainfall Depth, P_{24} (mm)	114	152	
5. Compute c* = (P_{24}-2Ia)/(P_{24}-2Ia+2S)	0.39	0.46	0.00
6. Specific Peak Flowrate, q* (from Figure 5.1)	0.093	0.106	0.000
7. Peak Flowrate, q_p = q*AP_{24} (m^3/s)	0.2376	0.3591	0.0000
8. Runoff Depth, Q_{24} = (P_{24}-Ia)2/(P_{24}-2Ia)+S (mm)	63.9	95.8	0.0
9. Runoff Volume, V_{24} = 1000Q_{24}A (m^3)	1426	2136	0

Riley Consultants Limited

Runoff Parameters and Time of Concentration
(from ARC's TP108)

Project Title: SS Cambridge
By: SJ

Project Number: 180171
Checked:

Catchment: Catchment B
Date: 26-Nov-20

Scenario: Cleanwater Bund B

1. Runoff Curve Number (CN) and Initial Abstraction (Ia)

Soil Name	Soil Classification	Cover Description	Pervious, Impervious	CN*	Area (Ha)	Product of CN x Area
		Stabilised Phase 2	Im P	91	1.2	109.2
* from Appendix B, TP108 (ARC, 1999)				**Totals =**	1.2	109.2

CN (Weighted) = 91.0

Ia (Weighted) = 0.0 mm

2. Time of Concentration

Channelisation Factor, C = 0.8 (from Table 4.2)

Catchment Length, L = 0.2 km (along drainage path)

Catchment Slope, S_C = 0.005 m/m (by equal area method)

Runoff factor = 0.83

Time of Concentration, t_C = 0.21 hrs

Time to Peak, t_P (=2/3 t_C) = 0.14 hrs

t_P = 8.4 mins

Riley Consultants Limited

Graphical Peak Flow Method
(from ARC's TP108)

Project Title: SS Cambridge **By:** SJ

Project Number: 180171 **Checked:**

Catchment: Catchment B **Date:** 26-Nov-20

Scenario: Cleanwater Bund B

1. Data

Catchment Area ….	A =	0.012	km^2
Runoff curve number….	CN =	91.0	
Initial Abstraction….	Ia =	0.0	mm
Time of Concentration….	tc =	0.21	hrs

2. Calculate Storage, S = (1000/CN - 10)25.4 = 25.1 mm

	Storm #1	Storm #2	Storm #3
3. Average Recurrence Interval, ARI (yr)	20	100	
4. 24-hour Rainfall Depth, P_{24} (mm)	114	152	
5. Compute c* = (P_{24}-2Ia)/(P_{24}-2Ia+2S)	0.69	0.75	0.00
6. Specific Peak Flowrate, q* (from Figure 5.1)	0.144	0.149	0.000
7. Peak Flowrate, q_p = q*AP_{24} (m^3/s)	0.1966	0.2719	0.0000
8. Runoff Depth, Q_{24} = (P_{24}-Ia)2/(P_{24}-2Ia)+S (mm)	93.4	130.4	0.0
9. Runoff Volume, V_{24} = 1000Q_{24}A (m^3)	1121	1565	0

Job No:	180171
Site Description:	Summerset Cambridge
Scenario:	SB1
Prepared By:	SJ
Date:	26/11/2020

Mannings Equation for an Irregular Trapezoidal Channel

A	Input data into yellow cells
B	Obtain Quantity of Flow from formula below
C	Use the quantity of flow to obtain the velocity and depth of flow from the table below

Parameters

Mannings n	0.035	
Channel Gradient (m/m)	0.005	- Friction Slope
Bed Width b (m)	0	
Side Slope m (m)	3	
Side Slope L	3	
Freeboard z (m)	0.3	- Refer design flowchart
Depth Increment (m)	0.05	

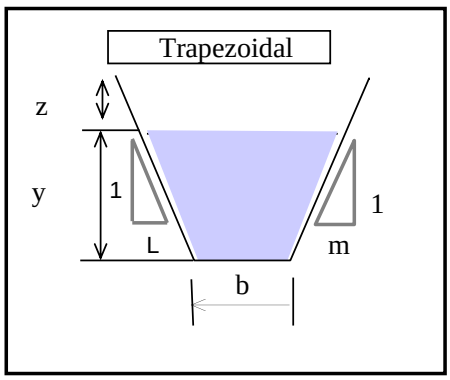

Input estimated depth -y (m) ->

Depth y (m)	Flow Q (cu.m./s)	Velocity V (m/s)	Width (m)	Area A (m2)
0.600	0.9441	0.874	3.6	1.080
0.650	1.1687	0.922	3.9	1.268
0.700	1.4241	0.969	4.2	1.470
0.750	1.7117	1.014	4.5	1.688
0.800	2.0332	1.059	4.8	1.920
0.850	2.3899	1.103	5.1	2.168
0.900	2.7834	1.145	5.400	2.430
0.950	3.2151	1.187	5.7	2.708
1.000	3.6864	1.229	6	3.000
1.050	4.1986	1.269	6.3	3.308
1.100	4.7531	1.309	6.6	3.630
1.150	5.3513	1.349	6.9	3.968
1.200	5.9944	1.388	7.2	4.320
1.250	6.6838	1.426	7.5	4.688
1.300	7.4208	1.464	7.8	5.070
1.350	8.2065	1.501	8.1	5.468
1.400	9.0422	1.538	8.4	5.880
1.450	9.9292	1.574	8.7	6.308
1.500	10.8687	1.610	9	6.750
1.550	11.8618	1.646	9.3	7.208
1.600	12.9098	1.681	9.6	7.680

To prevent siltation a minium channel slope of 0.005 must be used and the maximum channel velocity must be designed to exceed 0.6 m/s but not exceed :-

1.5 m/s in colluvium channels (particle size up to 50 mm);
2.5 m/s in waste rock channels (stone 50-150 mm),
3.0 m/s in proposed riprap lined channels (stone 150-450 mm),

Job No:	180171
Site Description:	Summerset Cambridge
Scenario:	SB2 and 3
Prepared By:	SJ
Date:	26/11/2020

Mannings Equation for an Irregular Trapezoidal Channel

A	Input data into yellow cells
B	Obtain Quantity of Flow from formula below
C	Use the quantity of flow to obtain the velocity and depth of flow from the table below

Parameters

Mannings n	0.035	
Channel Gradient (m/m)	0.005	- Friction Slope
Bed Width b (m)	0	
Side Slope m (m)	3	
Side Slope L	3	
Freeboard z (m)	0.3	- Refer design flowchart
Depth Increment (m)	0.05	

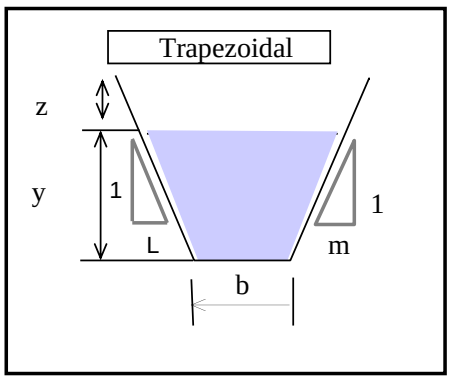

Input estimated depth -y (m) ->

Depth y (m)	Flow Q (cu.m./s)	Velocity V (m/s)	Width (m)	Area A (m2)
0.350	0.2243	0.610	2.1	0.368
0.400	0.3202	0.667	2.4	0.480
0.450	0.4384	0.722	2.7	0.608
0.500	0.5806	0.774	3	0.750
0.550	0.7486	0.825	3.3	0.908
0.600	0.9441	0.874	3.6	1.080
0.650	1.1687	0.922	3.900	1.268
0.700	1.4241	0.969	4.2	1.470
0.750	1.7117	1.014	4.5	1.688
0.800	2.0332	1.059	4.8	1.920
0.850	2.3899	1.103	5.1	2.168
0.900	2.7834	1.145	5.4	2.430
0.950	3.2151	1.187	5.7	2.708
1.000	3.6864	1.229	6	3.000
1.050	4.1986	1.269	6.3	3.308
1.100	4.7531	1.309	6.6	3.630
1.150	5.3513	1.349	6.9	3.968
1.200	5.9944	1.388	7.2	4.320
1.250	6.6838	1.426	7.5	4.688
1.300	7.4208	1.464	7.8	5.070
1.350	8.2065	1.501	8.1	5.468

To prevent siltation a minium channel slope of 0.005 must be used and the maximum channel velocity must be designed to exceed 0.6 m/s but not exceed :-

1.5 m/s in colluvium channels (particle size up to 50 mm);
2.5 m/s in waste rock channels (stone 50-150 mm),
3.0 m/s in proposed riprap lined channels (stone 150-450 mm),

Job No:	180171
Site Description:	Summerset Cambridge
Scenario:	SB4
Prepared By:	SJ
Date:	26/11/2020

Mannings Equation for an Irregular Trapezoidal Channel

A	Input data into yellow cells
B	Obtain Quantity of Flow from formula below
C	Use the quantity of flow to obtain the velocity and depth of flow from the table below

Parameters

Mannings n	0.035	
Channel Gradient (m/m)	0.005	- Friction Slope
Bed Width b (m)	0	
Side Slope m (m)	3	
Side Slope L	3	
Freeboard z (m)	0.3	- Refer design flowchart
Depth Increment (m)	0.05	

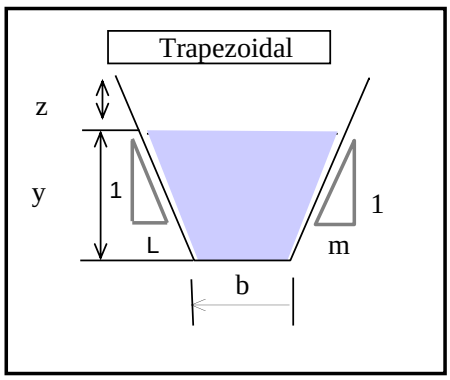

Input estimated depth -y (m) ->

Depth y (m)	Flow Q (cu.m./s)	Velocity V (m/s)	Width (m)	Area A (m2)
0.250	0.0914	0.488	1.5	0.188
0.300	0.1487	0.551	1.8	0.270
0.350	0.2243	0.610	2.1	0.368
0.400	0.3202	0.667	2.4	0.480
0.450	0.4384	0.722	2.7	0.608
0.500	0.5806	0.774	3	0.750
0.550	0.7486	0.825	3.300	0.908
0.600	0.9441	0.874	3.6	1.080
0.650	1.1687	0.922	3.9	1.268
0.700	1.4241	0.969	4.2	1.470
0.750	1.7117	1.014	4.5	1.688
0.800	2.0332	1.059	4.8	1.920
0.850	2.3899	1.103	5.1	2.168
0.900	2.7834	1.145	5.4	2.430
0.950	3.2151	1.187	5.7	2.708
1.000	3.6864	1.229	6	3.000
1.050	4.1986	1.269	6.3	3.308
1.100	4.7531	1.309	6.6	3.630
1.150	5.3513	1.349	6.9	3.968
1.200	5.9944	1.388	7.2	4.320
1.250	6.6838	1.426	7.5	4.688

To prevent siltation a minium channel slope of 0.005 must be used and the maximum channel velocity must be designed to exceed 0.6 m/s but not exceed :-

1.5 m/s in colluvium channels (particle size up to 50 mm);
2.5 m/s in waste rock channels (stone 50-150 mm),
3.0 m/s in proposed riprap lined channels (stone 150-450 mm),

Job No:	180171
Site Description:	Summerset Cambridge
Scenario:	CW A
Prepared By:	SJ
Date:	26/11/2020

Mannings Equation for an Irregular Trapezoidal Channel

A	Input data into yellow cells
B	Obtain Quantity of Flow from formula below
C	Use the quantity of flow to obtain the velocity and depth of flow from the table below

Parameters

Mannings n	0.035	
Channel Gradient (m/m)	0.005	- Friction Slope
Bed Width b (m)	0	
Side Slope m (m)	3	
Side Slope L	3	
Freeboard z (m)	0.3	- Refer design flowchart
Depth Increment (m)	0.05	

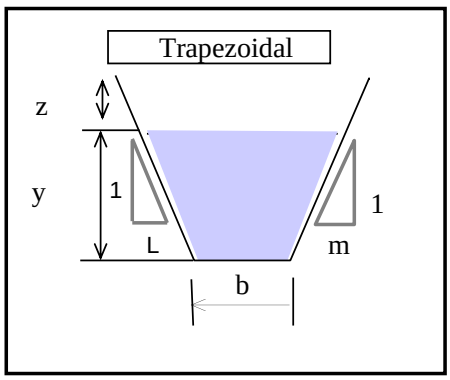

Input estimated depth -y (m) ->

Depth y (m)	Flow Q (cu.m./s)	Velocity V (m/s)	Width (m)	Area A (m2)
0.350	0.2243	0.610	2.1	0.368
0.400	0.3202	0.667	2.4	0.480
0.450	0.4384	0.722	2.7	0.608
0.500	0.5806	0.774	3	0.750
0.550	0.7486	0.825	3.3	0.908
0.600	0.9441	0.874	3.6	1.080
0.650	1.1687	0.922	3.900	1.268
0.700	1.4241	0.969	4.2	1.470
0.750	1.7117	1.014	4.5	1.688
0.800	2.0332	1.059	4.8	1.920
0.850	2.3899	1.103	5.1	2.168
0.900	2.7834	1.145	5.4	2.430
0.950	3.2151	1.187	5.7	2.708
1.000	3.6864	1.229	6	3.000
1.050	4.1986	1.269	6.3	3.308
1.100	4.7531	1.309	6.6	3.630
1.150	5.3513	1.349	6.9	3.968
1.200	5.9944	1.388	7.2	4.320
1.250	6.6838	1.426	7.5	4.688
1.300	7.4208	1.464	7.8	5.070
1.350	8.2065	1.501	8.1	5.468

To prevent siltation a minium channel slope of 0.005 must be used and the maximum channel velocity must be designed to exceed 0.6 m/s but not exceed :-

1.5 m/s in colluvium channels (particle size up to 50 mm);
2.5 m/s in waste rock channels (stone 50-150 mm),
3.0 m/s in proposed riprap lined channels (stone 150-450 mm),

Job No:	180171
Site Description:	Summerset Cambridge
Scenario:	CW B
Prepared By:	SJ
Date:	26/11/2020

Mannings Equation for an Irregular Trapezoidal Channel

A	Input data into yellow cells
B	Obtain Quantity of Flow from formula below
C	Use the quantity of flow to obtain the velocity and depth of flow from the table below

Parameters

Mannings n	0.035	
Channel Gradient (m/m)	0.005	- Friction Slope
Bed Width b (m)	0	
Side Slope m (m)	3	
Side Slope L	3	
Freeboard z (m)	0.3	- Refer design flowchart
Depth Increment (m)	0.05	

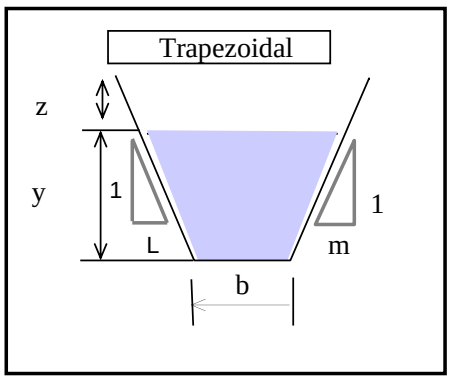

Input estimated depth -y (m) ->

Depth y (m)	Flow Q (cu.m./s)	Velocity V (m/s)	Width (m)	Area A (m2)
0.350	0.2243	0.610	2.1	0.368
0.400	0.3202	0.667	2.4	0.480
0.450	0.4384	0.722	2.7	0.608
0.500	0.5806	0.774	3	0.750
0.550	0.7486	0.825	3.3	0.908
0.600	0.9441	0.874	3.6	1.080
0.650	1.1687	0.922	3.900	1.268
0.700	1.4241	0.969	4.2	1.470
0.750	1.7117	1.014	4.5	1.688
0.800	2.0332	1.059	4.8	1.920
0.850	2.3899	1.103	5.1	2.168
0.900	2.7834	1.145	5.4	2.430
0.950	3.2151	1.187	5.7	2.708
1.000	3.6864	1.229	6	3.000
1.050	4.1986	1.269	6.3	3.308
1.100	4.7531	1.309	6.6	3.630
1.150	5.3513	1.349	6.9	3.968
1.200	5.9944	1.388	7.2	4.320
1.250	6.6838	1.426	7.5	4.688
1.300	7.4208	1.464	7.8	5.070
1.350	8.2065	1.501	8.1	5.468

To prevent siltation a minium channel slope of 0.005 must be used and the maximum channel velocity must be designed to exceed 0.6 m/s but not exceed :-

1.5 m/s in colluvium channels (particle size up to 50 mm);
2.5 m/s in waste rock channels (stone 50-150 mm),
3.0 m/s in proposed riprap lined channels (stone 150-450 mm),

Sediment Pond Design: (in general accordance with ARC TP90)

Job Name:	Summerset Cambridge
Job Number:	180171
Prepared by:	SJ
Date:	16/08/2020

Catchment Area	7.98	ha	Slope < 10%	minimum volume of	2	%	of the contributing catchment
Slope of earthworks	1	%	Slope > 10%	minimum volume of	3	%	of the contributing catchment
Minimum Volume of Pond	1596	m^3	Slope < 10%	minimum volume of	0.3	%	of the contributing catchment
Minimum Volume of Forebay	239.4	m^3	Slope > 10%	minimum volume of	0.3	%	of the contributing catchment
Dead Storage Volume	478.8	m^3	30% of minimum volume of pond				
Live Storage Volume	1117.2	m^3	70% of minimum volume of pond				

Shape of pond

Inlet side slope (Spreader)	3 : 1	gradient	
General side slopes	2.5 : 1	gradient	
Length to Width ratio	1.4 : 1		
Depth of Pond	3 m	Should range between 1 to 2m depth	
Depth of Dead Storage	2 m		
Depth of Live Storage	1 m		
Width (top)	59 m	Width (junc btw top & bottom)	54 m
Length (top)	82.6 m	Length (junc btw top & bottom)	78.7 m
Width (bottom)	44 m		
Length (bottom)	70.9 m		

Freeboard dimensions

Freeboard depth	0.3 m
Width (top)	60.5 m
Length (top)	84.25 m

Calculated Storage

Dead Storage Volume	7369 m^3	**PASS**
Live Storage Volume	4562 m^3	**PASS**
Total Storage Volume	11931 m^3	**PASS**

Forebay Design

Width	60.5 m	
Depth	0.6 m	
Length	7 m	
Approximate Volume	254.1 m^3	**PASS**

Decants

Max outflow rate	3 l/sec/ha	
Max flow for each decant	4.5 l/sec	(200 holes per decant)
Number of decants required	5.32	1064 holes

$Q_{(100)}$ Design Flows (From Rational Method)

Area	7.98 ha	
Runoff coeffient	0.6	
Rainfall intensity	152 mm/hr	Hirds
$Q_{(100)}$	2.02 m^3/sec	

Emergency Spillway

Base width	6.5 m	4m minimum	2.52
Depth	0.3 m	0.3m minimum	0.71
Side slopes	5 : 1	gradient	0.13
Flow Capacity (Qw)	2.13 m^3/sec	**PASS**	

Sediment Pond Design: (in general accordance with ARC TP90)

Job Name:	Summerset Cambridge
Job Number:	180171
Prepared by:	SJ
Date:	16/08/2020

Catchment Area	1.2	ha	Slope < 10%	minimum volume of	2	%	of the contributing catchment
Slope of earthworks	1	%	Slope > 10%	minimum volume of	3	%	of the contributing catchment
Minimum Volume of Pond	240	m^3	Slope < 10%	minimum volume of	0.3	%	of the contributing catchment
Minimum Volume of Forebay	36	m^3	Slope > 10%	minimum volume of	0.3	%	of the contributing catchment
Dead Storage Volume	72	m^3	30% of minimum volume of pond				
Live Storage Volume	168	m^3	70% of minimum volume of pond				

Shape of pond

Inlet side slope (Spreader)	3 : 1	gradient	
General side slopes	2.5 : 1	gradient	
Length to Width ratio	3 : 1		
Depth of Pond	1.2 m	Should range between 1 to 2m depth	
Depth of Dead Storage	0.75 m		
Depth of Live Storage	0.45 m		
Width (top)	12 m	Width (junc btw top & bottom)	9.75 m
Length (top)	36 m	Length (junc btw top & bottom)	33.5 m
Width (bottom)	6 m		
Length (bottom)	29.4 m		

Freeboard dimensions

Freeboard depth	0.3 m
Width (top)	13.5 m
Length (top)	37.65 m

Calculated Storage

Dead Storage Volume	189 m^3	**PASS**
Live Storage Volume	171 m^3	**PASS**
Total Storage Volume	359 m^3	**PASS**

Forebay Design

Width	13.5 m	
Depth	0.5 m	
Length	5.5 m	
Approximate Volume	37.125 m^3	**PASS**

Decants

Max outflow rate	3 l/sec/ha		
Max flow for each decant	4.5 l/sec	(200 holes per decant)	
Number of decants required	0.80	160 holes	

$Q_{(100)}$ Design Flows (From Rational Method)

Area	1.2 ha	
Runoff coeffient	0.6	
Rainfall intensity	152 mm/hr	Hirds
$Q_{(100)}$	0.30 m^3/sec	

Emergency Spillway

Base width	2 m	4m minimum		2.52
Depth	0.3 m	0.3m minimum		0.22
Side slopes	5 : 1	gradient		0.13
Flow Capacity (Qw)	0.89 m^3/sec	**PASS**		

CHEMICAL TREATMENT DOSING ASSESSMENT

RILEY CONSULTANTS

Job No: 180171
Client Detail: Summerset Cambridge
Site Description: Cambridge
Catchment: Pond A

Prepared By: SJ
Date: 26/11/2020

Sediment Ponds

	Rainfall Event	0.05	m
	Catchment size	50,000	m2
Step 1:	Calculate Runoff Volume	2500	m3
	Dose	10.7	m3
Step 2:	Volume of PAC required	233.64	L
	PAC Denisty	1.2	
Step 3:	Rainwater Volume	280.37	L
	50mm rainfall over 1m2	50	L
Step 4:	Roof tray size	5.61	m2

Low Flow Pipe Level

	Water Vol before Dosing starts	12	L/m2
	Low Flow Level	67.29	L

High Flow Pipe Level

	Water Vol before Dosing starts	12	L/m2
	High Flow Level	67.29	L

Earth Decants

Step 1:	Storage Volume	30	m3
	Dose	10.7	m3
Step 2:	Volume of PAC required	2.80	L

Dosing Rates

Dose	Treats m3 of stormwater
4mgAl	16
6mgAl	10.7
8mgAl	8
10mgAl	6.4
12mgAl	5.3

CHEMICAL TREATMENT DOSING ASSESSMENT

Job No: 180171
Client Detail: Summerset Cambridge
Site Description: Cambridge
Catchment: Pond B

Prepared By: SJ
Date: 26/11/2020

Sediment Ponds

	Rainfall Event	0.05	m
	Catchment size	12,000	m2
Step 1:	Calculate Runoff Volume	600	m3
	Dose	10.7	m3
Step 2:	Volume of PAC required	56.07	L
	PAC Denisty	1.2	
Step 3:	Rainwater Volume	67.29	L
	50mm rainfall over 1m2	50	L
Step 4:	Roof tray size	1.35	m2

Low Flow Pipe Level

	Water Vol before Dosing starts	12	L/m2
	Low Flow Level	16.15	L

High Flow Pipe Level

	Water Vol before Dosing starts	12	L/m2
	High Flow Level	16.15	L

Earth Decants

Step 1:	Storage Volume	30	m3
	Dose	10.7	m3
Step 2:	Volume of PAC required	2.80	L

Dosing Rates

Dose	Treats m3 of stormwater
4mgAl	16
6mgAl	10.7
8mgAl	8
10mgAl	6.4
12mgAl	5.3

EARTHWORKS SOIL LOSS ESTIMATES:
U.S.L.E. CALCULATIONS:

RILEY CONSULTANTS

Job No:	180171
Client Detail:	Summerset Cambridge
Site Description:	Cambridge
Catchment:	Cambridge

Prepared By: **SJ**
Date: 26/11/2020

Step 1: Determination of R factor

TP108 2 year ARI depth (P)	80
R	78

Step 2: Determination of K factor prior to construction

Estimated K value from Nomograph	0.45
Estimated organic matter (assume 4%)	-0.14
K (corrected)	0.31
K (metric)	0.41

Step 3: Determination of K factor during to construction

Estimated K value from Nomograph	0.45
Estimated organic matter (assume 4%)	0.14
K (corrected)	0.59
K (metric)	0.78

Typical values from Triangular Nomograph for Estimating K Values

45% clay, 45% silt, 10% sand	0.32
20% clay, 60% silt, 20% sand	0.45
40% clay, 40% silt, 20% sand	0.31
60% clay, 35% silt, 5% sand	0.23

Correction for Organic Matter

	Correction factor when percentage organic matter is				
K Value	0	1	2	3	4
Greater than 0.40	0.14	0.07	0.00	-0.07	-0.14
0.20 - 0.40	0.10	0.05	0.00	-0.05	-0.10
Less than 0.20	0.06	0.03	0.00	-0.03	-0.06

C and P Factors for USLE

Treatment	C Factor	P Factor
Bare Soil		
- compacted and smooth	1.0	1.3
- track walked on contour	1.0	1.2
-rough irregular surface	1.0	0.9
- disked to 250mm depth	1.0	0.8
Native vegetation (undisburbed)	0.01	1.0
Pasture (undisturbed)	0.02	1.0
Temporary grass	0.1	1.0
Mulch on topsoil	0.05	1.0

EARTHWORKS SOIL LOSS ESTIMATES:
U.S.L.E. CALCULATIONS:

Job No: 180171
Client Detail: Summerset Cambridge
Site Description: Cambridge
Catchment: Cambridge

Prepared By: **SJ**
26/11/2020

Pre Earthworks Scenario

Device	Description		USLE Parameters								Est.Gross Sediment Yield (tonnes/yr)	Sediment Delivery Ratio	Sediment Control Efficiency (%)	Net Sediment Loss (tonne/yr)	Net Sediment Loss (tonne)*
		Area (ha)	R	K	Slope Length (ave. m)	Slope steepness (ave. %)	LS	C	P		Pre Construction Period				
Pre Construction															
none	**Catchment 1**	9.90	78	0.41	250	0.5	0.145	0.02	1.00		0.914	0.3	0%	0.274	0.206
	Totals	**9.90**			**250**						**0.914**	**Soil Loss Estimate**		**0.274**	**0.206**

* Construction and re-establishment period: 9 months

Unmitigated Earthworks Scenario

Device	Description		USLE Parameters							Time	Estimated Gross Sediment Yield (tonnes)		Sediment Delivery Ratio	Sediment Control Efficiency (%)	Net Sediment Loss (tonne)
		Area (ha)	R	K	Slope Length (ave. m)	Slope steepness (ave. %)	LS	C	P	(months)	Construction Period	Re-estab. Period			
Construction (unmitigated)															
none	**Catchment 1**	9.90	78	0.78	250	0.5	0.145	1.00	1.20	8	69.57		0.5	0%	34.787
	Totals	**9.90**			**250**							**Soil Loss Estimate (Earthworks)**			**34.787**
Re-establishment (unmitigated)															
none	**Catchment 1**	9.90	78	0.41	250	0.5	0.145	0.10	1.00	1		0.38	0.5	0%	0.190
	Totals	**9.90**			**250**							**Soil Loss Estimate (Re-establishment)**			**0.190**
											69.6	**0.4**	**Total Soil Loss Est.**		**34.977**

EARTHWORKS SOIL LOSS ESTIMATES:
U.S.L.E. CALCULATIONS:

Job No: 180171
Client Detail: Summerset Cambridge
Site Description: Cambridge
Catchment: Cambridge

Prepared By: **SJ**
26/11/2020

Mitigated Earthworks Scenario

Device	Description		USLE Parameters								Time	Estimated Gross Sediment Yield (tonnes)		Sediment Delivery Ratio	Sediment Control Efficiency (%)	Net Sediment Loss (tonne)
		Area (ha)	R	K	Slope Length (ave. m)	Slope steepness (ave. %)	LS	C	P	(months)	Construction Period	Re-estab. Period			
Construction (mitigated)																
1, 2, 4	**Phase 1a and b**	5.00	78	0.78	350	0.4	0.146	1.00	1.20	3.5	15.47		0.5	90%	0.774
1, 2, 5	**Phase 1c**	2.98	78	0.78	100	0.4	0.114	1.00	1.20	1.5	3.09		1.5	90%	0.463
1, 2, 4	**Phase 2**	1.20	78	0.78	100	0.4	0.114	1.00	1.20	2	1.66		0.5	90%	0.083
2 and 4	**Phase 3**	0.72	78	0.78	80	0.4	0.109	1.00	1.20	1	0.48		0.5	90%	0.024
	Totals	**9.90**										**Soil Loss Estimate (Earthworks)**			**1.343**
Re-establishment (mitigated)																
1, 2, 4	**Phase 1a and b**	5.00	78	0.41	350	0.4	0.146	0.10	1.00	0.4		0.08	0.5	90%	0.004
1, 2, 5	**Phase 1c**	2.98	78	0.41	100	0.4	0.114	0.10	1.00	0.1		0.01	1.5	90%	0.001
1, 2, 4	**Phase 2**	1.20	78	0.41	100	0.4	0.114	0.10	1.00	0.25		0.01	0.5	90%	0.000
2 and 4	**Phase 3**	0.72	78	0.41	80	0.4	0.109	0.10	1.00	0.25		0.01	0.5	90%	0.000
	Totals	**9.90**										**Soil Loss Estimate (Re-establishment)**			**0.006**
											20.7	**0.1**	**Total Soil Loss Est.**		**1.349**

Devices

1 Sediment Retention Pond, Chemical Treatment. 90%
2 Silt fence, earth decants, etc 50%
3 Track walk on contour at the end of each day. 50%
4 Topsoil and mulching and/or granular placement progressively. 50%

APPENDIX B

RILEY Dwgs:
180171-100 to -111

SUMMERSET VILLAGES (CAMBRIDGE) LTD

LAURENT ROAD, CAMBRIDGE

PROPOSED RETIREMENT VILLAGE

EARTHWORKS AND SEDIMENT CONTROL REPORT DRAWINGS		DAY	26	29
		MONTH	11	07
		YEAR	20	21
		ISSUE	1	2
RIL–CMB–SW–CW 100	DRAWING LIST AND LOCALITY PLAN		1	2
RIL–CMB–SW–CW 101	EXISTING SITE PLAN		1	2
RIL–CMB–SW–CW 102	PROPOSED FINISHED SURFACE PLAN		1	2
RIL–CMB–SW–CW 103	PROPOSED CUT/FILL PLAN		1	2
RIL–CMB–SW–CW 104	EROSION AND SEDIMENT CONTROL LAYOUT – PHASE 1		1	2
RIL–CMB–SW–CW 105	EROSION AND SEDIMENT CONTROL LAYOUT – PHASE 2		1	2
RIL–CMB–SW–CW 106	EROSION AND SEDIMENT CONTROL LAYOUT – PHASE 3		1	2
RIL–CMB–SW–CW 107	SEDIMENT POND DETAILS – PHASE 1 & 2 – SHEET 1		1	2
RIL–CMB–SW–CW 108	SEDIMENT POND DETAILS – PHASE 1 & 2 – SHEET 2		1	2
RIL–CMB–SW–CW 109	EROSION AND SEDIMENT CONTROL – TYPICAL DETAILS – SHEET 1		1	2
RIL–CMB–SW–CW 110	EROSION AND SEDIMENT CONTROL – TYPICAL DETAILS – SHEET 2		1	2
RIL–CMB–SW–CW 111	EROSION AND SEDIMENT CONTROL – TYPICAL DETAILS – SHEET 3		1	2

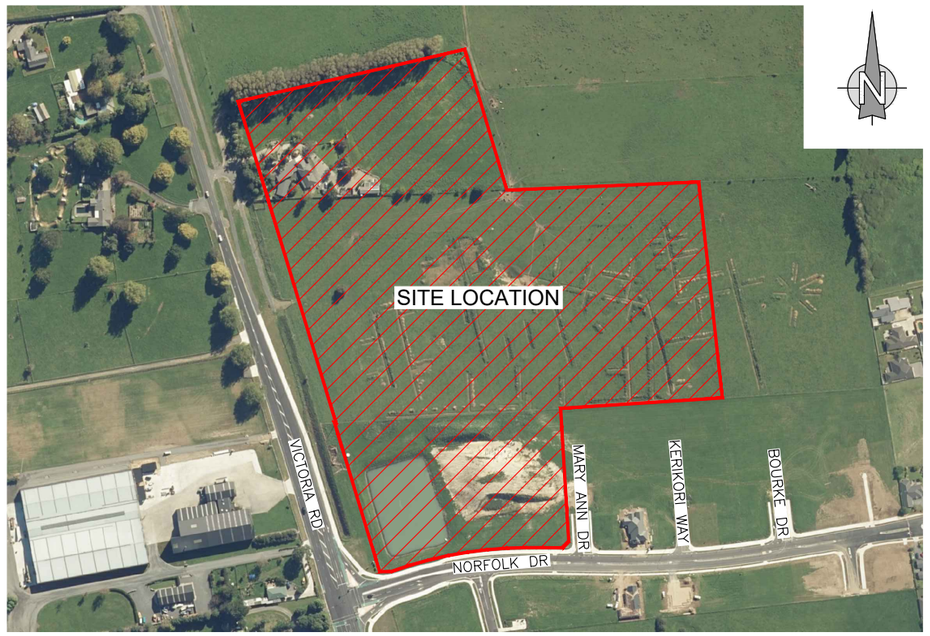

LOCALITY PLAN
SCALE 1:5000

50 0 100 200m
SCALE 1:5000

GENERAL NOTES:

1. ALL WORKS TO BE UNDERTAKEN IN ACCORDANCE WITH THE DRAWINGS & SPECIFICATIONS AND APPROVALS (RESOURCE CONSENT, BUILDING CONSENT AND ENGINEERING APPROVALS).
2. THE CONTRACTOR IS RESPONSIBLE FOR ENSURING THE LATEST REVISION DRAWINGS ARE ON SITE.
3. ALL DRAWINGS AND SPECIFICATIONS TO BE READ IN CONJUNCTION WITH THE ARCHITECT, LANDSCAPING, SERVICES PROVIDERS, STRUCTURAL AND HYDRAULIC ENGINEER'S DOCUMENTATION.
4. ALL EARTHWORKS, INCLUDING TRENCHING FOR SERVICES, ARE TO BE FULLY SUPPORTED.
5. DO NOT SCALE OR DIMENSION FROM THESE DRAWINGS.
6. TOPOGRAPHICAL SURVEY INFORMATION PROVIDED BY SURVEY COGSWELL SURVEYORS, JULY 2020.
7. LEVELS ARE IN TERMS OF MOTURIKI DATUM 1953.
8. CO–ORDINATES IN TERMS OF NZGD, MT EDEN 2000.
9. ALL WORK & MATERIALS TO BE IN ACCORDANCE WITH COUNCIL STANDARDS & SPECIFICATIONS.
10. THE CONTRACTOR IS TO LOCATE & PROTECT ALL EXISTING SERVICES, INCLUDING POWER, TELECOM, GAS, WATER, STORMWATER & WASTEWATER BEFORE COMMENCING WORKS. LIAISE WITH RESPECTIVE SERVICE AUTHORITIES FOR ASSISTANCE.
11. ANY DISCREPANCIES BETWEEN THE DRAWINGS & SITE CONDITIONS ARE TO BE NOTIFIED TO THE ENGINEER IMMEDIATELY.
12. ALL NEW PIPEWORK SHALL BE PROTECTED AGAINST DAMAGE DURING CONSTRUCTION.
13. ALL WORKS TO BE SET OUT ON SITE PRIOR TO CONSTRUCTION. ANY DISCREPANCIES ARE TO BE REPORTED TO THE ENGINEER PRIOR TO COMMENCEMENT.
14. CONTRACTOR TO GIVE NOTICE TO THE ENGINEER PRIOR TO BACKFILLING ANY WORK.
15. THE CONTRACTOR MUST BE SATISFIED THAT THE WORKS HAVE BEEN COMPLETED IN ACCORDANCE WITH THE DRAWINGS AND SPECIFICATION PRIOR TO REQUESTING AN INSPECTION.
16. IT IS THE CONTRACTOR'S RESPONSIBILITY TO LIAISE WITH THE ENGINEER TO SATISFY THEMSELVES THEY CLEARLY UNDERSTAND WHEN ALL INSPECTIONS ARE REQUIRED.
17. ALL WORKS SHALL COMPLY WITH THE HEALTH & SAFETY PLAN SUBMITTED BY THE CONTRACTOR.

SEDIMENT CONTROL NOTES:

1. EARTHWORKS AND SEDIMENT CONTROL REPORT DRAWINGS TO BE READ IN CONJUNCTION WITH RILEY REPORT REF: 180171–I.
2. ALL EROSION AND SEDIMENT MEASURES ARE GENERALLY IN ACCORDANCE WITH WRC EROSION AND SEDIMENT CONTROL GUIDELINES FOR SOIL DISTURBING ACTIVITIES, JANUARY 2009, ENVIRONMENT WAIKATO TECHNICAL REPORT NO.2009/02
3. THE CONTRACTOR (AND THEIR SUB–CONTRACTORS) SHALL BE RESPONSIBLE FOR PROVIDING ADEQUATE SEDIMENT AND EROSION CONTROL MEASURES TO PROTECT DOWNSTREAM ENVIRONMENTS FROM EXCESSIVE SEDIMENTATION AND WATER QUALITY DEGRADATION. THE CONTRACTOR SHALL PREPARE SEDIMENT CONTROL LAYOUT PLANS ACCORDING WITH THE E&SCP AND PROVIDE COPIES TO THE SITE ENGINEER AND COUNCIL REPRESENTATIVE FOR APPROVAL PRIOR TO COMMENCING ANY EARTHWORKS ACTIVITIES.
4. CONTRACTOR WILL BE REQUIRED TO LIAISE WITH COUNCIL REPRESENTATIVE PRIOR TO AND DURING CONSTRUCTION TO ENSURE SEDIMENT CONTROL MEASURES ARE SUFFICIENT.
5. EROSION AND SEDIMENT CONTROL MEASURES SHALL BE CONSTRUCTED BEFORE COMMENCING ANY EARTHWORKS.

FOR CONSENT

REV	DATE	ISSUE	BY
2	29.07.21	RESOURCE CONSENT ISSUE	PO
1	26.11.20	RESOURCE CONSENT ISSUE	PO

DESIGN	DES CHECK	APPROVED FOR ISSUE
N/A	SJ	S JAMES
DRAWN	CAD CHECK	
PO	PO	
DATE DRAWN		ISSUE DATE
AUGUST 2020		29/07/21

RILEY CONSULTANTS
www.riley.co.nz

Summerset

CLIENT	SUMMERSET VILLAGES (CAMBRIDGE) LTD
ADDRESS	LAURENT ROAD, CAMBRIDGE
PROJECT	PROPOSED RETIREMENT VILLAGE
SHT TITLE	DRAWING LIST AND LOCALITY PLAN

ACENZ
ISO 9001 CERTIFIED BY SGS

RILEY CADFILE		
180171–100		
SCALE (A3)	ORIG. SHT SIZE	
1:5000	A3	
JOB No.	DWG No.	REV.
RIL-CMB-SW-CW 100		2

NOTES:

1. SURVEY INFORMATION PROVIDED BY COGSWELL SURVEYORS, JULY 2020.
2. LEVELS ARE IN TERMS OF MOTURIKI DATUM 1953.
3. CO-ORDINATES IN TERMS OF NZGD, MT EDEN 2000.
4. AERIAL IMAGE SOURCED FROM LINZ, JULY 2020.

LEGEND

- SUMMERSET SITE BOUNDARY
- PROPERTY BOUNDARIES
- EX. MAJ CONTOURS (1m)
- EX. MIN CONTOURS (0.2m)

15 0 30 60m

SCALE 1:1500

BOURKE DRIVE
KEREKORI WAY
MARY ANN DRIVE
NORFOLK DRIVE
60/80 LAURENT RD
LOT 4 DPS 74868
102 LAURENT RD
LOT 2 DP 381032
100 LAURENT RD
LOT 1 DP 381032
EXISTING SW DETENTION POND
EXISTING COUNCIL SWALE

FOR CONSENT

REV	DATE	ISSUE	BY
2	29.07.21	RESOURCE CONSENT ISSUE	PO
1	26.11.20	RESOURCE CONSENT ISSUE	PO

DESIGN	DES CHECK	APPROVED FOR ISSUE
N/A	SJ	S JAMES
DRAWN	CAD CHECK	
PO	PO	
DATE DRAWN		ISSUE DATE
AUGUST 2020		29/07/21

RILEY CONSULTANTS
www.riley.co.nz

Summerset

CLIENT	SUMMERSET VILLAGES (CAMBRIDGE) LTD
ADDRESS	LAURENT ROAD, CAMBRIDGE
PROJECT	PROPOSED RETIREMENT VILLAGE
SHT TITLE	EXISTING SITE PLAN

ACENZ
ISO 9001 CERTIFIED GCS

RILEY CADFILE		
180171-101		
SCALE (A3)	ORIG. SHT SIZE	
1:1500	A3	
JOB No.	DWG No.	REV.
RIL-CMB-SW-CW	101	2

LEGEND

- SITE BOUNDARY
- EX. MAJ CONTOURS (1m)
- EX. MIN CONTOURS (0.2m)
- PROPOSED MAJ CONTOURS (0.5m)
- PROPOSED MIN CONTOURS (0.1m)
- PROPOSED OVERLAND FLOWPATH
- 65.84 EXISTING LEVELS (*TOP OF KERB)
- 65.30 PROPOSED LEVELS
- 64.83 50 YEAR FLOOD LEVEL IN SWALE
- PROPOSED TIMBER POLE RETAINING WALL
- PROPOSED KEYSTONE RETAINING WALL
- 0.8 MAX HEIGHT OF RETAINING WALL (m)
- FFL 66.35 INDICATIVE FUTURE BUILDING OUTLINE AND FLOOR LEVEL

15 0 30 60m
SCALE 1:1500

NOTES:

1. LEVELS ARE IN TERMS OF MOTURIKI DATUM 1953.
2. CO-ORDINATES IN TERMS OF NZGD, MT EDEN 2000.

PUBLIC SW SYSTEM SIZED TO PASS SW RUNOFF FOR UP TO 1 IN 50 YEAR EVENT. FOR UPSLOPE NEIGHBOURING CATCHMENT.

PROPOSED SWALE BASED ON WSP DESIGN FROM OCTOBER 2019 (NOT PART OF THIS APPLICATION). EARTHWORKS FROM SUMMERSET SITE TO 'DAYLIGHT' TO TOP OF SWALE LEVELS

FORM LOCALISED SWALE TO INLET OF PUBLIC SCRUFFY DOME AND SW SYSTEM

LOCALISED FILLING OF EXISTING LOW POINTS

LOCALISED FILLING OF EXISTING LOW POINTS

ACCESS TO BE FORMED TO END OF MARY ANN DRIVE

LOCALISED FILLING OF EXISTING LOW POINTS

EXCLUSION ZONE. NO EARTHWORKS IN THIS AREA

MAIN BUILDING

BOURKE DRIVE

KEREKORI WAY

MARY ANN DRIVE

NORFOLK DRIVE

VICTORIA ROAD

FOR CONSENT

REV	DATE	ISSUE	BY
2	29.07.21	RESOURCE CONSENT ISSUE	PO
1	26.11.20	RESOURCE CONSENT ISSUE	PO

DESIGN	DES CHECK	APPROVED FOR ISSUE
SJ	SJ	S JAMES
DRAWN	CAD CHECK	
PO	PO	
DATE DRAWN		ISSUE DATE
AUGUST 2020		29/07/21

RILEY CONSULTANTS
www.riley.co.nz

Summerset

CLIENT	SUMMERSET VILLAGES (CAMBRIDGE) LTD
ADDRESS	LAURENT ROAD, CAMBRIDGE
PROJECT	PROPOSED RETIREMENT VILLAGE
SHT TITLE	PROPOSED FINISHED SURFACE PLAN

ACENZ
ISO 9001 CERTIFIED GCS

RILEY CADFILE	180171-102
SCALE (A3)	1:1500
ORIG. SHT SIZE	A3
JOB No.	RIL-CMB-SW-CW 102
DWG No.	
REV.	2

EARTHWORKS QUANTITIES

CUT (m³) – 0.2m	28,821
FILL (m³) – 0.2m	39,346
BALANCE – SITE (FILL) (m³)	10,525
SWALE CUT VOL (m³)	13,880
EARTHWORKS AREA (m²)	98,893

15 0 30 60m
SCALE 1:1500

NOTES:

1. LEVELS ARE IN TERMS OF MOTURIKI DATUM 1953.
2. CO–ORDINATES IN TERMS OF NZGD, MT EDEN 2000.
3. CUT/FILL CONTOURS ARE MEASURED BETWEEN EXISTING GROUND SURFACE LESS 300mm TOP SOIL STRIP AND PROPOSED FINISHED SUBGRADE SURFACE. (AVERAGED AT 450mm BELOW FINISHED SURFACE).

LOCALISED FILLING OF EXISTING LOW POINTS
BOURKE DRIVE
KEREKORI WAY
LOCALISED FILLING OF EXISTING LOW POINTS
ACCESS TO BE FORMED TO END OF MARY ANN DRIVE
LOCALISED FILLING OF EXISTING LOW POINTS
MARY ANN DRIVE
EXISTING STOCKPILES TO BE REMOVED/USED AS FILL
NORFOLK DRIVE
EXISTING STORMWATER DETENTION BASIN TO BE INFILLED
EXCLUSION ZONE – NO EARTHWORKS IN THIS AREA
PROPOSED COUNCIL SWALE EARTHWORKS NOT PART OF THIS CONSENT
VICTORIA ROAD

FOR CONSENT

REV	DATE	ISSUE	BY
2	29.07.21	RESOURCE CONSENT ISSUE	PO
1	26.11.20	RESOURCE CONSENT ISSUE	PO

DESIGN	DES CHECK	APPROVED FOR ISSUE
SJ	SJ	S JAMES
DRAWN	CAD CHECK	
PO	PO	
DATE DRAWN		ISSUE DATE
AUGUST 2020		29/07/21

RILEY CONSULTANTS
www.riley.co.nz

Summerset

CLIENT	SUMMERSET VILLAGES (CAMBRIDGE) LTD
ADDRESS	LAURENT ROAD, CAMBRIDGE
PROJECT	PROPOSED RETIREMENT VILLAGE
SHEET TITLE	CUT/FILL PLAN

ACENZ
ISO 9001 CERTIFIED GCS

CADFILE	180171–103
SCALE (A3)	ORIG. SHEET SIZE
1:1500	A3
DRAWING No.	REV.
180171-103	2

LEGEND

- SITE BOUNDARY
- SF — SILT FENCE
- SEDIMENT BUND
- DIRTY WATER DIVERSION CHANNEL
- CLEANWATER DIVERSION CHANNEL
- PHASE 1A EARTHWORKS AREA
- PHASE 1B EARTHWORKS AREA
- PHASE 1C EARTHWORKS AREA
- STABILISED CONSTRUCTION AREA

15 0 30 60m
SCALE 1:1500

NOTES:

1. ALL EROSION AND SEDIMENT MEASURES TO BE IN ACCORDANCE WITH WRC EROSION AND SEDIMENT CONTROL GUIDELINES FOR SOIL DISTURBING ACTIVITIES, JANUARY 2009, ENVIRONMENT WAIKATO TECHNICAL REPORT NO.2009/02

PHASE 1 TEMPORARY STOCKPLIE AREA WITH PERIMETER SILT FENCE

STABILISED CONSTRUCTION ACCESSWAY

MAIN BUILDING

BOURKE DRIVE

KEREKORI WAY

TEMPORARY 450mmø CULVERT FOR CROSSING OF DIVERSION CHANNEL

STABILISED CONSTRUCTION ENTRANCE WITH TRUCK WASH. CROWN OVER CHANNEL AND TEMPORARY CULVERT

TW

STABILISED CONSTRUCTION ENTRANCE AND YARD FOR SITE OFFICES/LIGHT VEHICLES

MARY ANN DRIVE

NORFOLK DRIVE

60m W x 7m L x 0.6m D FOREBAY AND LEVEL SPREADER. GRADE AND SHAPE UPSLOPE GROUND PROFILES INTO FOREBAY.

EXCLUSION ZONE – NO EARTHWORKS IN THIS AREA

SEDIMENT POND – REUSE EXISTING STORMWATER DETENTION POND FOLLOWING THE CONSTRUCTION OF THE SWALE ALONG VICTORIA ROAD

FLOATING DECANT STRUCTURE WITH 300mm uPVC OUTLET. DIRECT TO SWALE

PROPOSED SWALE TO BE CONSTRUCTED BY COUNCIL PRIOR TO WORKS COMMENCING ON SITE

EMERGENCY SPILLWAY (6.5m WIDE x 0.3m DEEP). SHAPE AND DIRECT TOWARDS SWALE. ENSURE SWALE IS INSTALLED AT THE LOWEST POINT WITH AT LEAST 0.5m DEPTH FROM INVERT TO SURROUNDING CREST POINTS OF THE POND.

VICTORIA ROAD

FOR CONSENT

REV	DATE	ISSUE	BY
2	29.07.21	RESOURCE CONSENT ISSUE	PO
1	26.11.20	RESOURCE CONSENT ISSUE	PO

DESIGN	DES CHECK	APPROVED FOR ISSUE
SJ	SJ	S JAMES
DRAWN	CAD CHECK	
PO	PO	
DATE DRAWN		ISSUE DATE
AUGUST 2020		29/07/21

RILEY CONSULTANTS
www.riley.co.nz

Summerset

CLIENT	SUMMERSET VILLAGES (CAMBRIDGE) LTD
ADDRESS	LAURENT ROAD, CAMBRIDGE
PROJECT	PROPOSED RETIREMENT VILLAGE
SHT TITLE	EROSION AND SEDIMENT CONTROL LAYOUT - PHASE 1

ACENZ
ISO 9001 CERTIFIED GCS

RILEY CADFILE	180171–104
SCALE (A3)	1:1500
ORIG. SHT SIZE	A3
JOB No.	RIL-CMB-SW-CW 104
DWG No.	
REV.	2

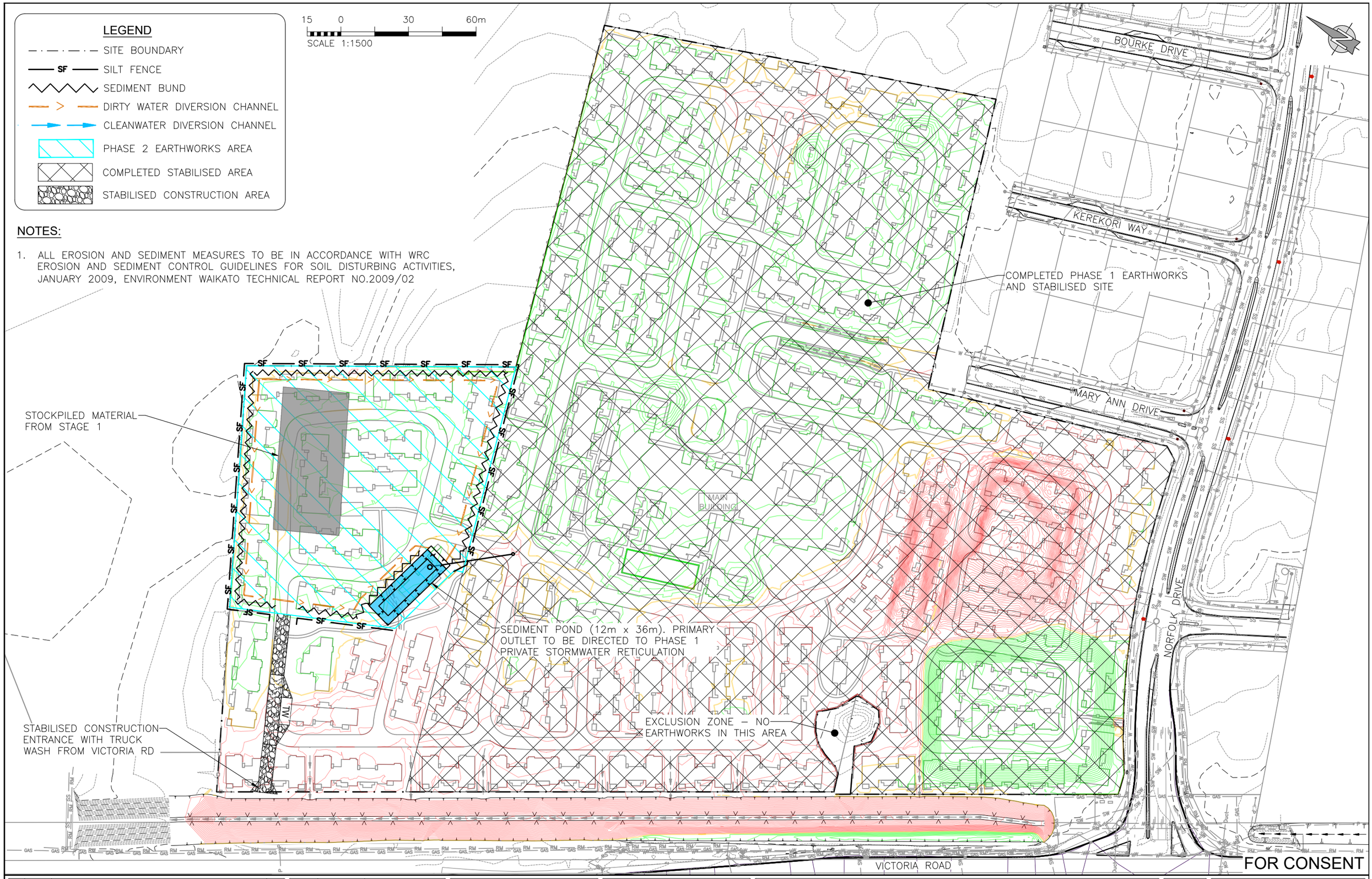

NOTES:

1. ALL EROSION AND SEDIMENT MEASURES TO BE IN ACCORDANCE WITH WRC EROSION AND SEDIMENT CONTROL GUIDELINES FOR SOIL DISTURBING ACTIVITIES, JANUARY 2009, ENVIRONMENT WAIKATO TECHNICAL REPORT NO.2009/02

FOR CONSENT

REV	DATE	ISSUE	BY
2	29.07.21	RESOURCE CONSENT ISSUE	PO
1	26.11.20	RESOURCE CONSENT ISSUE	PO

DESIGN	DES CHECK	APPROVED FOR ISSUE
SJ	SJ	S JAMES
DRAWN	CAD CHECK	
PO	PO	
DATE DRAWN		ISSUE DATE
AUGUST 2020		29/07/21

RILEY CONSULTANTS
www.riley.co.nz

Summerset

CLIENT	SUMMERSET VILLAGES (CAMBRIDGE) LTD
ADDRESS	LAURENT ROAD, CAMBRIDGE
PROJECT	PROPOSED RETIREMENT VILLAGE
SHT TITLE	EROSION AND SEDIMENT CONTROL LAYOUT - PHASE 2

ACENZ
ISO 9001 CERTIFIED GCS

RILEY CADFILE	180171–105	
SCALE (A3)	1:1500	ORIG. SHT SIZE A3
JOB No.	DWG No.	REV.
RIL-CMB-SW-CW	105	2

LEGEND

- SITE BOUNDARY
- SF — SILT FENCE
- SEDIMENT BUND
- DIRTY WATER DIVERSION CHANNEL
- CLEANWATER DIVERSION CHANNEL
- PHASE 3 EARTHWORKS AREA
- COMPLETED STABILISED AREA
- STABILISED CONSTRUCTION AREA

15 0 30 60m

SCALE 1:1500

NOTES:

1. ALL EROSION AND SEDIMENT MEASURES TO BE IN ACCORDANCE WITH WRC EROSION AND SEDIMENT CONTROL GUIDELINES FOR SOIL DISTURBING ACTIVITIES, JANUARY 2009, ENVIRONMENT WAIKATO TECHNICAL REPORT NO.2009/02

BOURKE DRIVE

KEREKORI WAY

COMPLETED PHASE 1 EARTHWORKS AND STABILISED SITE

MARY ANN DRIVE

COMPLETED PHASE 2 EARTHWORKS AND STABILISED SITE

MAIN BUILDING

NORFOLK DRIVE

EARTH DECANT C (0.15ha CATCHMENT)

EARTH DECANTS A AND B (0.3ha CATCHMENT)

EXCLUSION ZONE – NO EARTHWORKS IN THIS AREA

STABILISED CONSTRUCTION ENTRANCE WITH TRUCK WASH FROM VICTORIA RD (FROM PHASE 2)

VICTORIA ROAD

FOR CONSENT

REV	DATE	ISSUE	BY
2	29.07.21	RESOURCE CONSENT ISSUE	PO
1	26.11.20	RESOURCE CONSENT ISSUE	PO

DESIGN	DES CHECK	APPROVED FOR ISSUE
SJ	SJ	S JAMES
DRAWN	CAD CHECK	
PO	PO	
DATE DRAWN		ISSUE DATE
AUGUST 2020		29/07/21

RILEY CONSULTANTS
www.riley.co.nz

Summerset

CLIENT	SUMMERSET VILLAGES (CAMBRIDGE) LTD
ADDRESS	LAURENT ROAD, CAMBRIDGE
PROJECT	PROPOSED RETIREMENT VILLAGE
SHT TITLE	EROSION AND SEDIMENT CONTROL LAYOUT - PHASE 3

ACENZ
ISO 9001 CERTIFIED IQNZ

RILEY CADFILE	180171–106	
SCALE (A3)	ORIG. SHT SIZE	A3
1:1500		
JOB No.	DWG No.	REV.
RIL-CMB-SW-CW	106	2

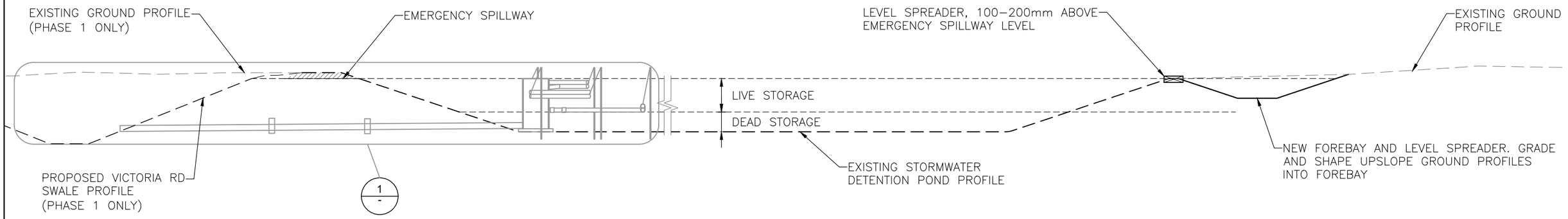

TYPICAL SECTION - SEDIMENT POND (EXISTING SW DETENTION POND)

SCALE 1:200

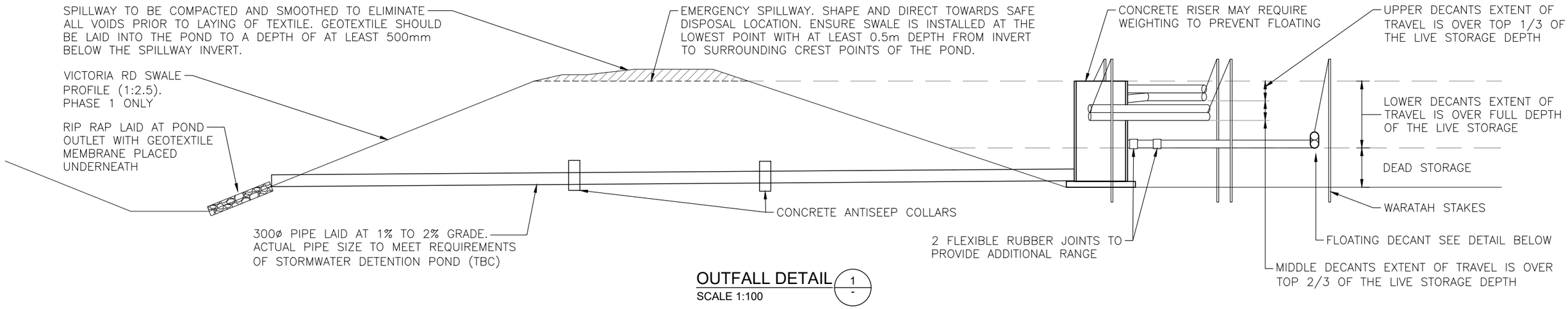

OUTFALL DETAIL

1
-

SCALE 1:100

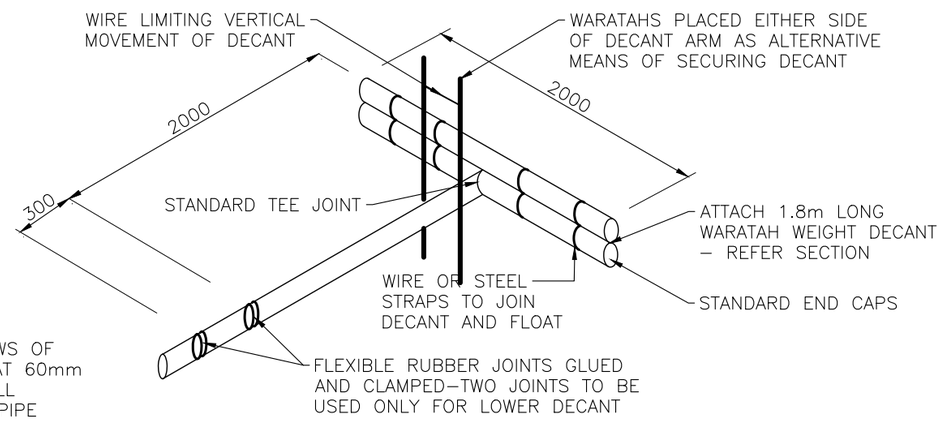

DECANT:
SIX EQUALLY SPACED ROWS OF
10mm DIAMETER HOLES AT 60mm
SPACINGS ALONG THE FULL
LENGTH OF THE DECANT PIPE

SCHEMATIC - DECANT OUTLET

N.T.S.

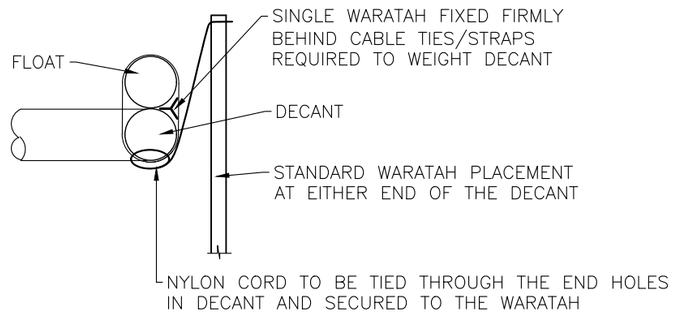

TYPICAL SECTION - FLOATING DECANT OUTLET

N.T.S.

FOR CONSENT

REV	DATE	ISSUE	BY
2	29.07.21	RESOURCE CONSENT ISSUE	PO
1	26.11.20	RESOURCE CONSENT ISSUE	PO

DESIGN	DES CHECK	APPROVED FOR ISSUE
SJ	SJ	S JAMES
DRAWN	CAD CHECK	
PO	PO	
DATE DRAWN		ISSUE DATE
AUGUST 2020		29/07/21

RILEY CONSULTANTS
www.riley.co.nz

Summerset

CLIENT	SUMMERSET VILLAGES (CAMBRIDGE) LTD
ADDRESS	LAURENT ROAD, CAMBRIDGE
PROJECT	PROPOSED RETIREMENT VILLAGE
SHT TITLE	SEDIMENT POND DETAILS - PHASE 1 & 2 - SHEET 1

ACENZ
ISO 9001 CERTIFIED BSCS

RILEY CADFILE	180171–107 & 108
SCALE (A3)	ORIG. SHT SIZE
1:1500	A3
JOB No.	DWG No. / REV.
RIL-CMB-SW-CW 107	2

PROVIDE SUFFCIENT WORKSPACE AROUND THE POND TO ENABLE ACCESS FOR MAINTENANCE AND ENSURE THAT ADEQUATE GROUND STABILITY IS MAINTAINED.

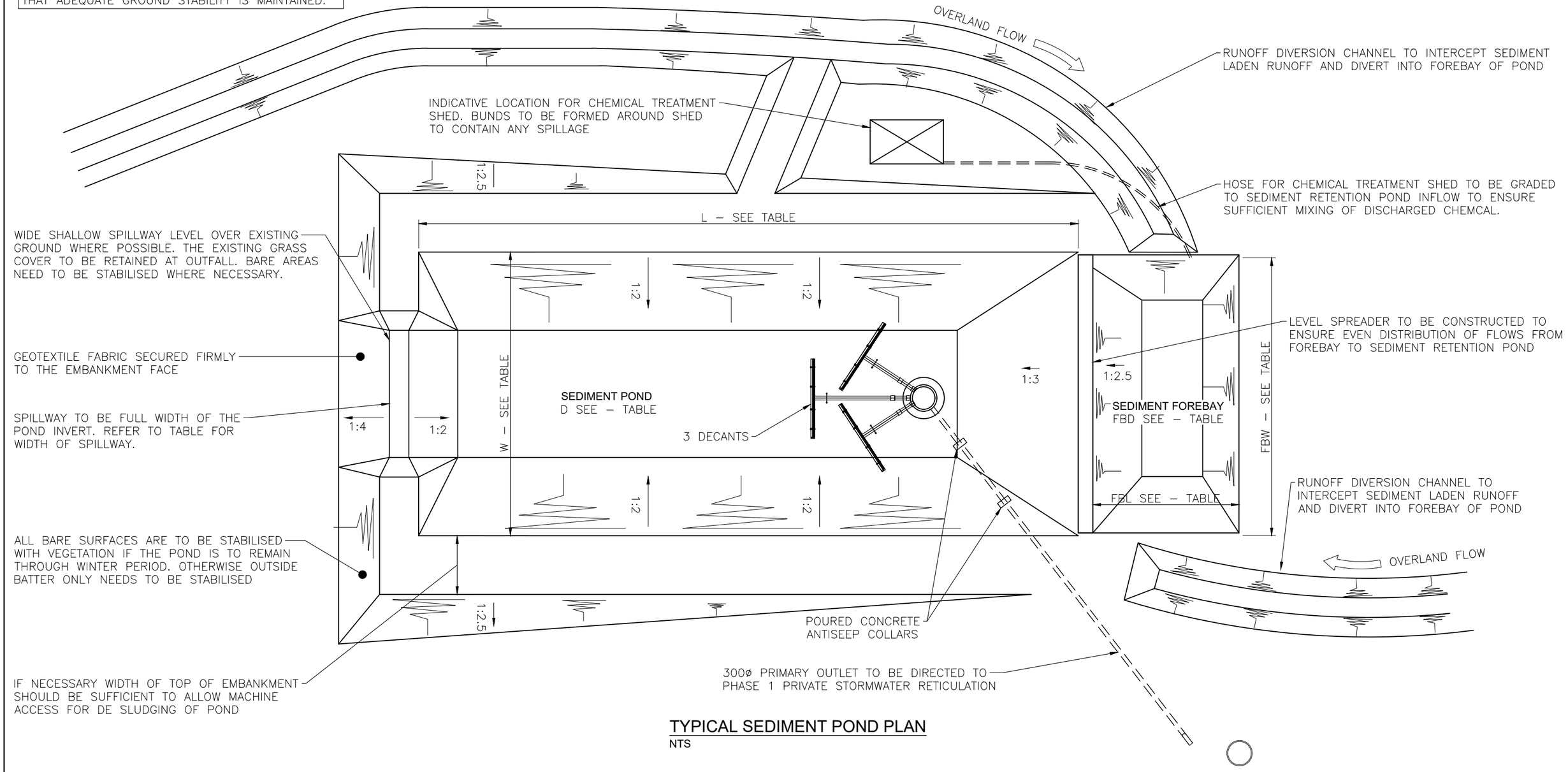

TYPICAL SEDIMENT POND PLAN

NTS

SEDIMENT POND DETAILS

	CATCHMENT AREA (Ha)	WIDTH (m) W	LENGTH (m) L	DEPTH (m) D	LENGTH/WIDTH RATIO	FOREBAY WIDTH (m) FBW	FOREBAY LENGTH (m) FBL	FOREBAY DEPTH (m) FBD	DEPTH OF DEAD STORAGE (m)	DEPTH OF LIVE STORAGE (m)	EMERGENCY SPILLWAY WIDTH (m)	TOTAL STORAGE VOLUME REQD. (m³)	TOTAL STORAGE VOLUME ACHIEVED (m³)	DECANTS
POND – PHASE 1 (EXISTING)	7.98	59	83	3.00	1.4 : 1	60.5	7	0.6	2.0	1.0	6.5	1596	11 930	x5 1064 HOLES
POND – PHASE 2	1.2	12	36	1.20	3 : 1	13.5	5.5	0.5	0.45	0.75	2.0	240	359	x1 160 HOLES

FOR CONSENT

REV	DATE	ISSUE	
2	29.07.21	RESOURCE CONSENT ISSUE	PO
1	26.11.20	RESOURCE CONSENT ISSUE	PO

DESIGN	DES CHECK	APPROVED FOR ISSUE
SJ	SJ	S JAMES
DRAWN	CAD CHECK	
PO	PO	
DATE DRAWN		ISSUE DATE
AUGUST 2020		29/07/21

RILEY CONSULTANTS
www.riley.co.nz

Summerset

CLIENT	SUMMERSET VILLAGES (CAMBRIDGE) LTD
ADDRESS	LAURENT ROAD, CAMBRIDGE
PROJECT	PROPOSED RETIREMENT VILLAGE
SHT TITLE	SEDIMENT POND DETAILS - PHASE 1 & 2 - SHEET 2

ACENZ
ISO 9001 CERTIFIED GCS

RILEY CADFILE	180171–107 & 108
SCALE (A3)	ORIG. SHT SIZE
1:1500	A3
JOB No.	DWG No. / REV.
RIL-CMB-SW-CW 108	2

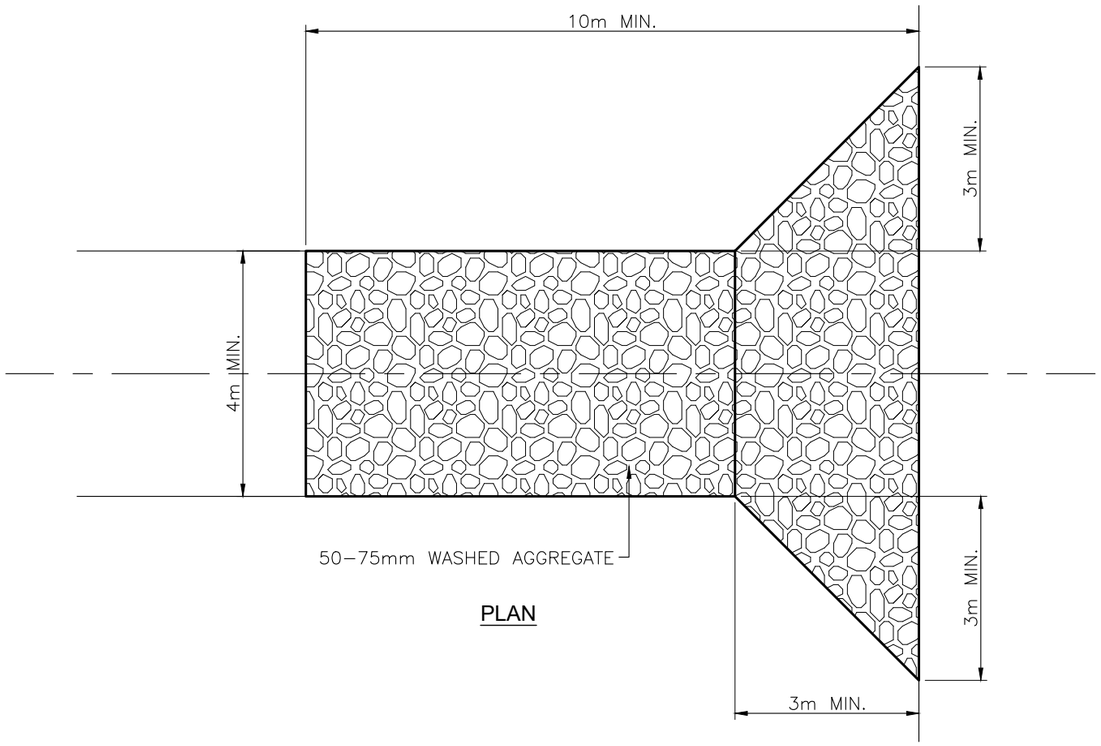

PLAN

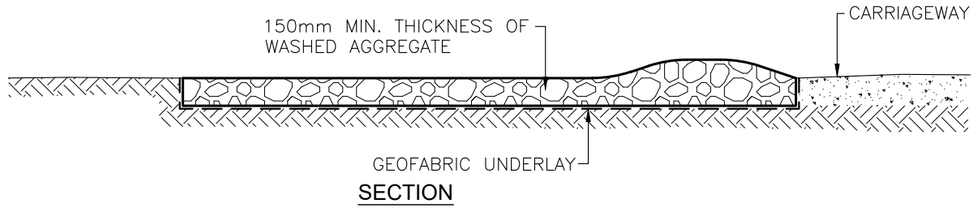

SECTION

TYPICAL STABILISED CONSTRUCTION ENTRANCE

SCALE 1 : 100

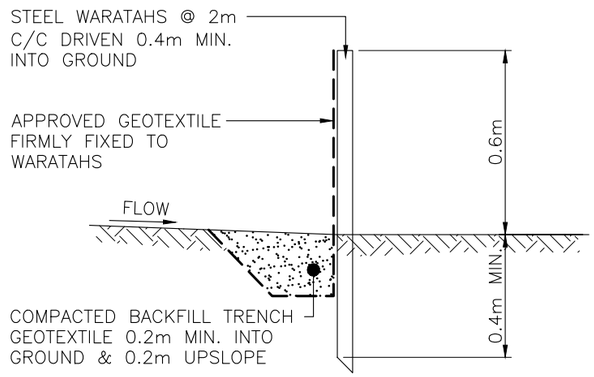

TYPICAL SILT FENCE DETAIL

SCALE 1 : 20

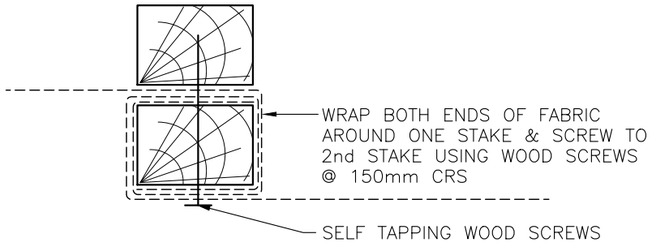

GEOTEXTILE FIXING DETAIL

SCALE 1 : 10

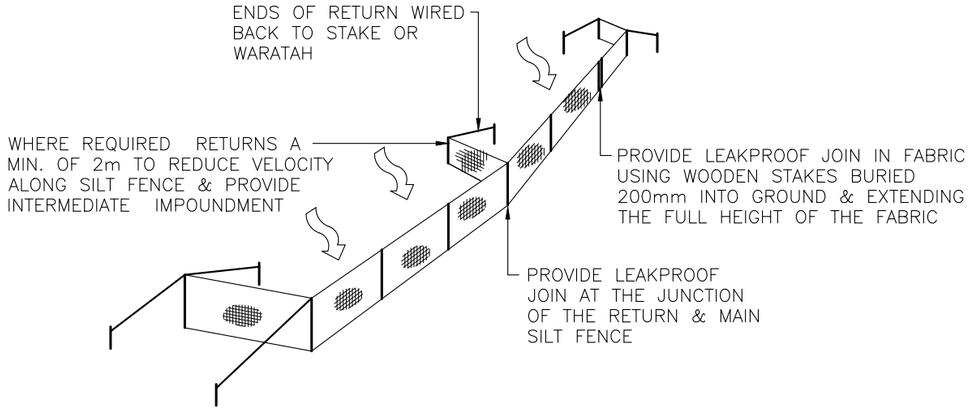

SILT FENCE ERECTION DETAIL

SCALE 1 : 50

FOR CONSENT

REV	DATE	ISSUE	BY
2	29.07.21	RESOURCE CONSENT ISSUE	PO
1	26.11.20	RESOURCE CONSENT ISSUE	PO

DESIGN	DES CHECK	APPROVED FOR ISSUE
SJ	SJ	S JAMES
DRAWN	CAD CHECK	
PO	PO	
DATE DRAWN		ISSUE DATE
AUGUST 2020		29/07/21

RILEY CONSULTANTS
www.riley.co.nz

Summerset

CLIENT	SUMMERSET VILLAGES (CAMBRIDGE) LTD
ADDRESS	LAURENT ROAD, CAMBRIDGE
PROJECT	PROPOSED RETIREMENT VILLAGE
SHT TITLE	EROSION AND SEDIMENT CONTROL - TYPICAL DETAILS - SHEET 1

ACENZ
ISO 9001 CERTIFIED GCS

RILEY CADFILE		
180171–109 to 111		
SCALE (A3)	ORIG. SHT SIZE	
1:1500	A3	
JOB No.	DWG No.	REV.
RIL-CMB-SW-CW	109	2

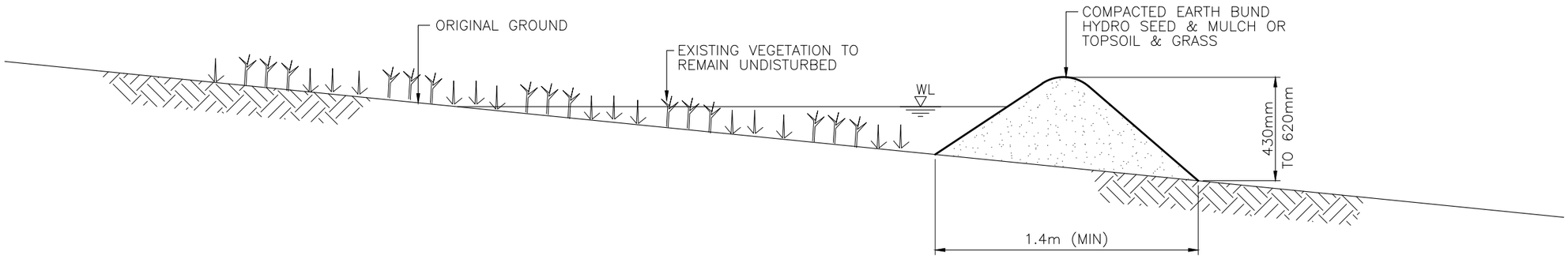

TYPICAL CLEANWATER DIVERSION CHANNEL DETAIL

SCALE 1 : 25

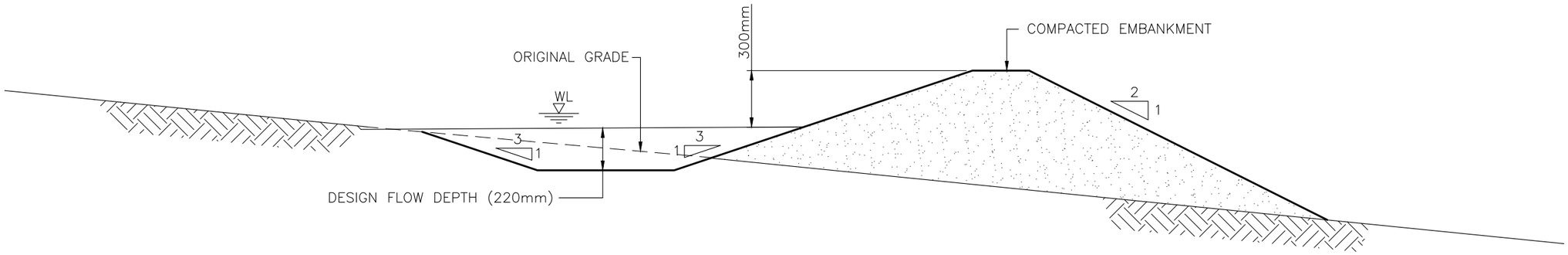

TYPICAL SEDIMENT BUND/DIRTY WATER DIVERSION CHANNEL DETAIL

SCALE 1 : 25

FOR CONSENT

REV	DATE	ISSUE	BY
2	29.07.21	RESOURCE CONSENT ISSUE	PO
1	26.11.20	RESOURCE CONSENT ISSUE	PO

DESIGN	DES CHECK	APPROVED FOR ISSUE
SJ	SJ	S JAMES
DRAWN	CAD CHECK	
PO	PO	
DATE DRAWN		ISSUE DATE
AUGUST 2020		29/07/21

RILEY CONSULTANTS
www.riley.co.nz

Summerset

CLIENT	SUMMERSET VILLAGES (CAMBRIDGE) LTD
ADDRESS	LAURENT ROAD, CAMBRIDGE
PROJECT	PROPOSED RETIREMENT VILLAGE
SHT TITLE	EROSION AND SEDIMENT CONTROL - TYPICAL DETAILS - SHEET 2

ACENZ
ISO 9001 CERTIFIED IQCS

RILEY CADFILE	180171–109 to 111	
SCALE (A3)	ORIG. SHT SIZE	
1:1500	A3	
JOB No.	DWG No.	REV.
RIL-CMB-SW-CW	110	2

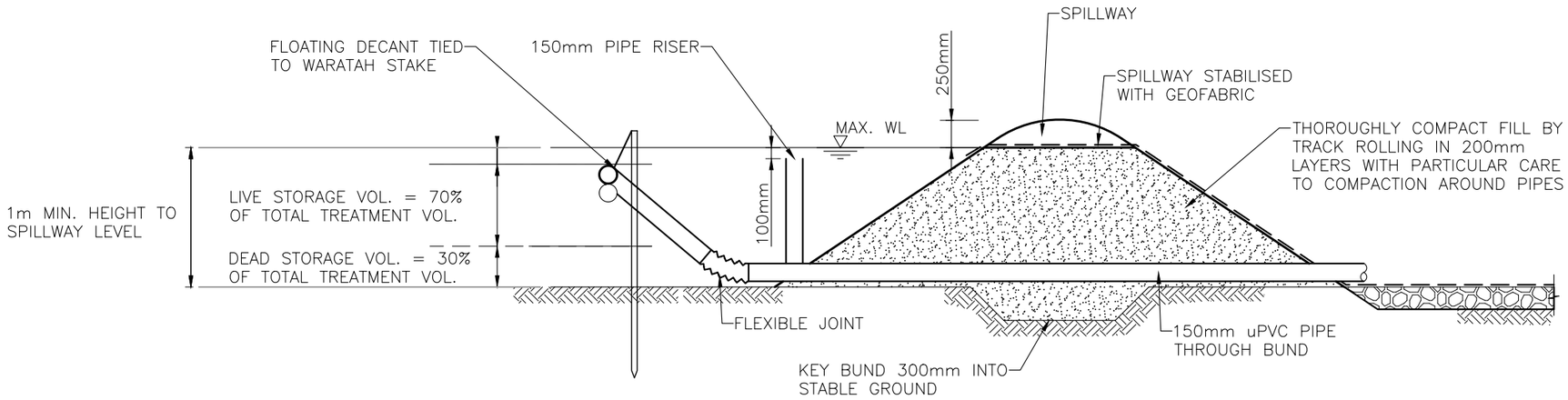

TYPICAL DECANTING EARTH BUND DETAIL

SCALE 1 : 50

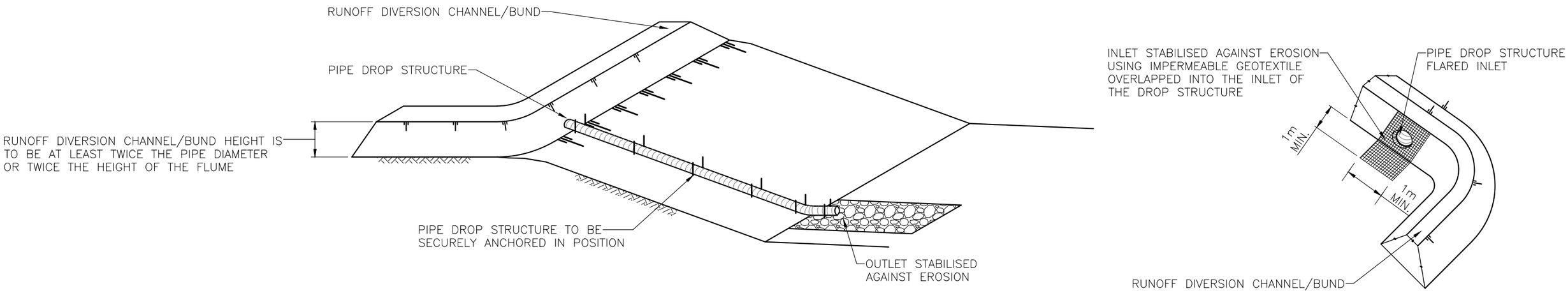

PIPE DROP STRUCTURE DETAILS

N.T.S.

FOR CONSENT

REV	DATE	ISSUE	BY
2	29.07.21	RESOURCE CONSENT ISSUE	PO
1	26.11.20	RESOURCE CONSENT ISSUE	PO

DESIGN	DES CHECK	APPROVED FOR ISSUE
SJ	SJ	S JAMES
DRAWN	CAD CHECK	
PO	PO	
DATE DRAWN		ISSUE DATE
AUGUST 2020		29/07/21

RILEY CONSULTANTS
www.riley.co.nz

Summerset

CLIENT	SUMMERSET VILLAGES (CAMBRIDGE) LTD
ADDRESS	LAURENT ROAD, CAMBRIDGE
PROJECT	PROPOSED RETIREMENT VILLAGE
SHT TITLE	EROSION AND SEDIMENT CONTROL - TYPICAL DETAILS - SHEET 3

ACENZ
ISO 9001 CERTIFIED GCS

RILEY CADFILE	180171-109 to 111
SCALE (A3)	1:1500
ORIG. SHT SIZE	A3
JOB No.	RIL-CMB-SW-CW
DWG No.	111
REV.	2